5. Parts List (PL)

Section Contents

1. Main Assembly 2
PL 1.1. Final Assembly 2
PL 1.2. Cabinet - Covers 3
2. Frame Assembly 5
PL 2.1. Frame Assembly- Paper path panels 5
PL 2.2. Frame Assembly- Front side 6
PL 2.3. Frame Assembly- Rear Side 7
PL 2.4. Frame Assembly- Drive Rollers 8
PL 2.5. Frame Assembly- Internal Parts 9
PL 2.6. Frame Assembly- Motors and Motor Drivers 10
PL 2.7. Frame Assembly- Sensors 11
PL 2.8. Frame Assembly- Solenoids / Switches 12
PL 2.9. Frame Assembly- Belts 13
3. Paper Path 14
PL 3.1. Paper Path- Entrance Drive Panel 14
PL 3.2. Paper Path- Entrance Idler Panel 15
PL 3.3. Paper Path- Acceleration Roller Idler 16
PL 3.4. Paper Path- Exit Idler Panel 17
PL 3.5. Paper Path- Upper Bypass Panel 18
PL 3.6. Paper Path- Disengaging Roller Solenoid 19
4. Punch Module 20
PL 4.1. Punch Module 20
PL 4.2. Punch Module (continued) 21
PL 4.3. Punch Module- Motors/Sensors 22
PL 4.4. Punch Module- Steering Module 24
PL 4.5. Punch Module- Steering Module - Steering Idler Panel Sub Assembly 25
PL 4.6. Punch Module- Steering Module - Drive Panel Steering 26
PL 4.7. Punch Module- Stepper Alignment Bracket 27
PL 4.8. Punch Module- Punch Clutch 28
PL 4.9. Punch Module- Die Set Recognition Reader Board 29
PL 4.10. Punch Module- Die Rail, Backgage, Align Sensors, Sub Assembly 30
PL 4.11. Punch Module- AC Motor 31
5. Die Sets 32
6. Electronics 33
PL 6.1. Electronics PCB Assembly 33
PL 6.2. Control Board Bracket Sub Assembly 34
PL 6.3. Cable Part Number Index 35
PL 6.4. Wiring Drawing 36
7. Installation Kit Parts 38
8. Part Number Index 39

Main Assembly

PL 1.1. Final Assembly

ITEM	Part #	DESCRIPTION	QTY
1	7724401	PUNCH G3 115V	1
	7724451	PUNCH G3 230V	1

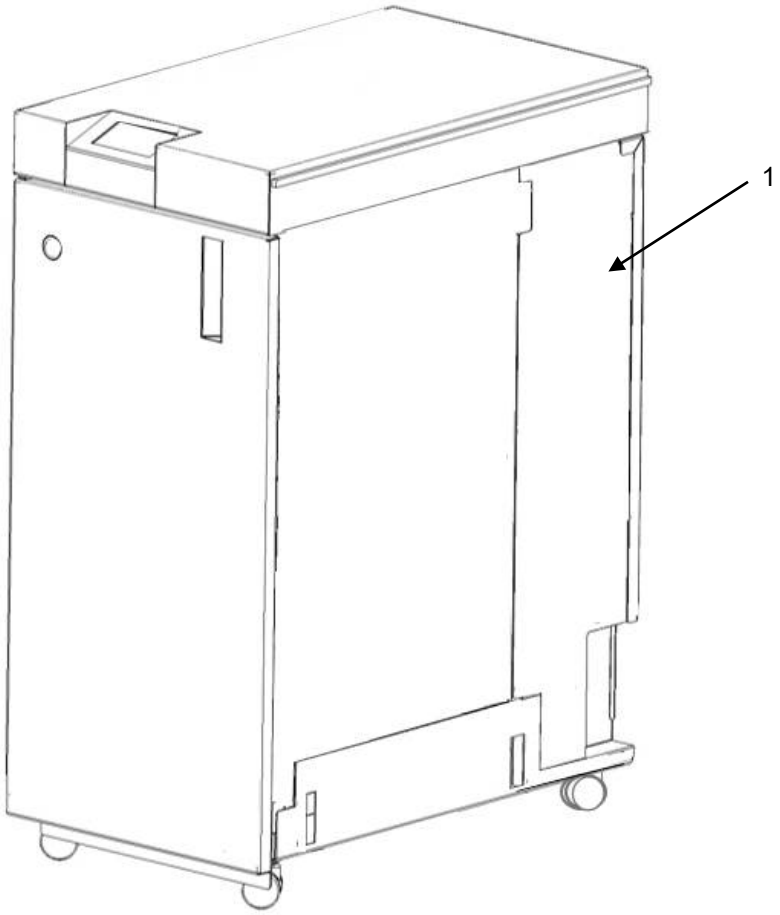

PL 1.2. Cabinet- Covers

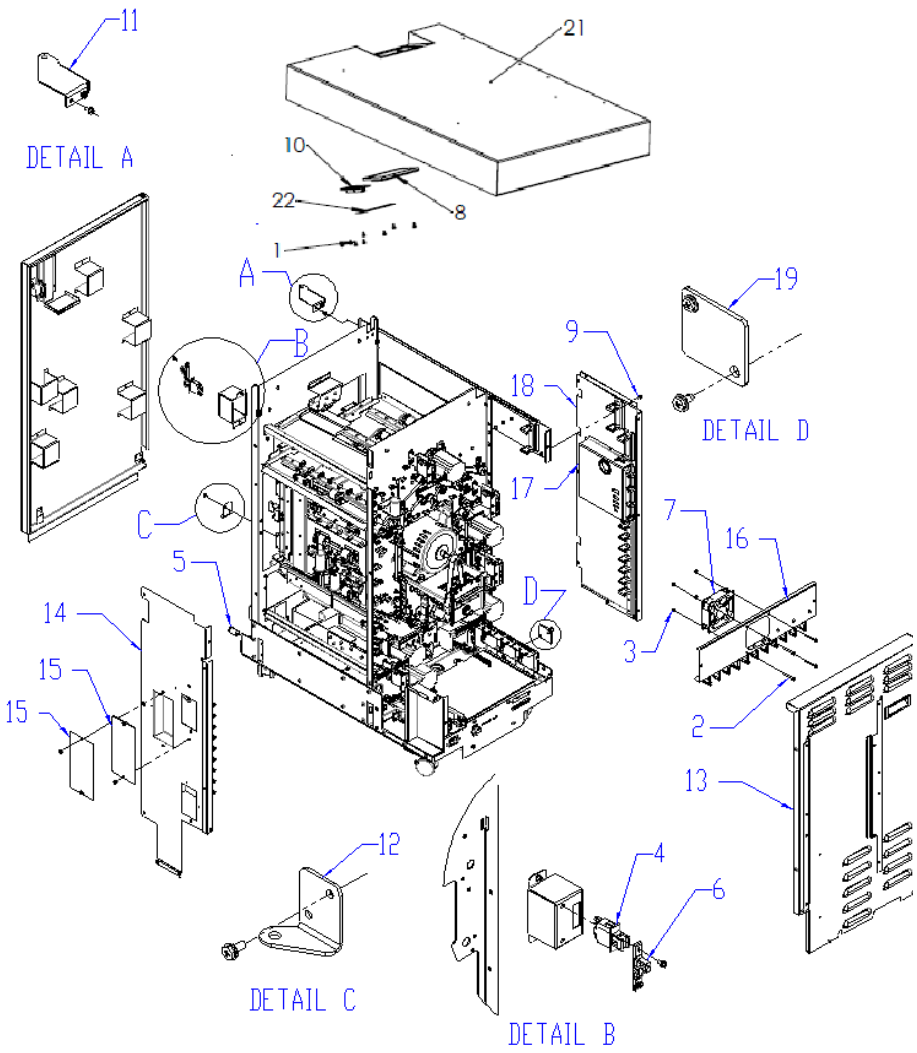

ITEM	GBC Part #	DESCRIPTION	QTY
1	1823901	SCREW, PHILLIPS, HEX HD M3X6	5
2	1823905	SCREW, PHILLIPS HX HD M4X35	4
3	1824001	NUT, KEPS M4	4
4	Z7724859	INTERLOCK SWITCH	1
5	7706447	MAGNET, FRONT DOOR	1
6	7706486	LATCH, PUSH TO CLOSE	1
7	7715267	FAN, EXHAUST	1
8	*Z7724960	LCD, TOUCHSCREEN, 4.3”	1
9	7715632	SCREW, ROUND TIP, HEX HD, PHILLIPS, M4 X 8	39
10	*Z7724960	ADAPTER PCB, LCD TOUCHSCREEN	1
11	7718836	HINGE,, UPPER SUBASSY, KM	1
12	7718838	HINGE ASSY, LOWER, KM	1
13	7718840	COVER PANEL ASSY, BACK, KM	1
14	7718847	COVER WELDMENT, R-BACK, KM	1
15	7718856	COVER, POCKET	2
16	7718859	BRACKET, EXHAUST FAN, KM	1
17	7718862	COVER, WELDMENT, SIDE, DOWNSTREAM, REAR, KM	1
18	7718867	PANEL ASSY, BACK LEFT, SPARTA, KM	1
19	7718872	SPACER, KM SPARTA, MTG INTERFACE	4
20	7718873	FOAM, KM SPARTA	1
21	7724412	TOP COVER WELDMENT	1
22	*Z7724960	RIBBON CABLE, LCD	1

***Note:** When ordering the LCD Touchscreen, LCD Adapter PCB, or LCD Ribbon Cable it will come in the form of a kit with all (3) parts under part number Z7724960.

Frame Assembly

PL 2.1. Frame Assembly- Paper path panels

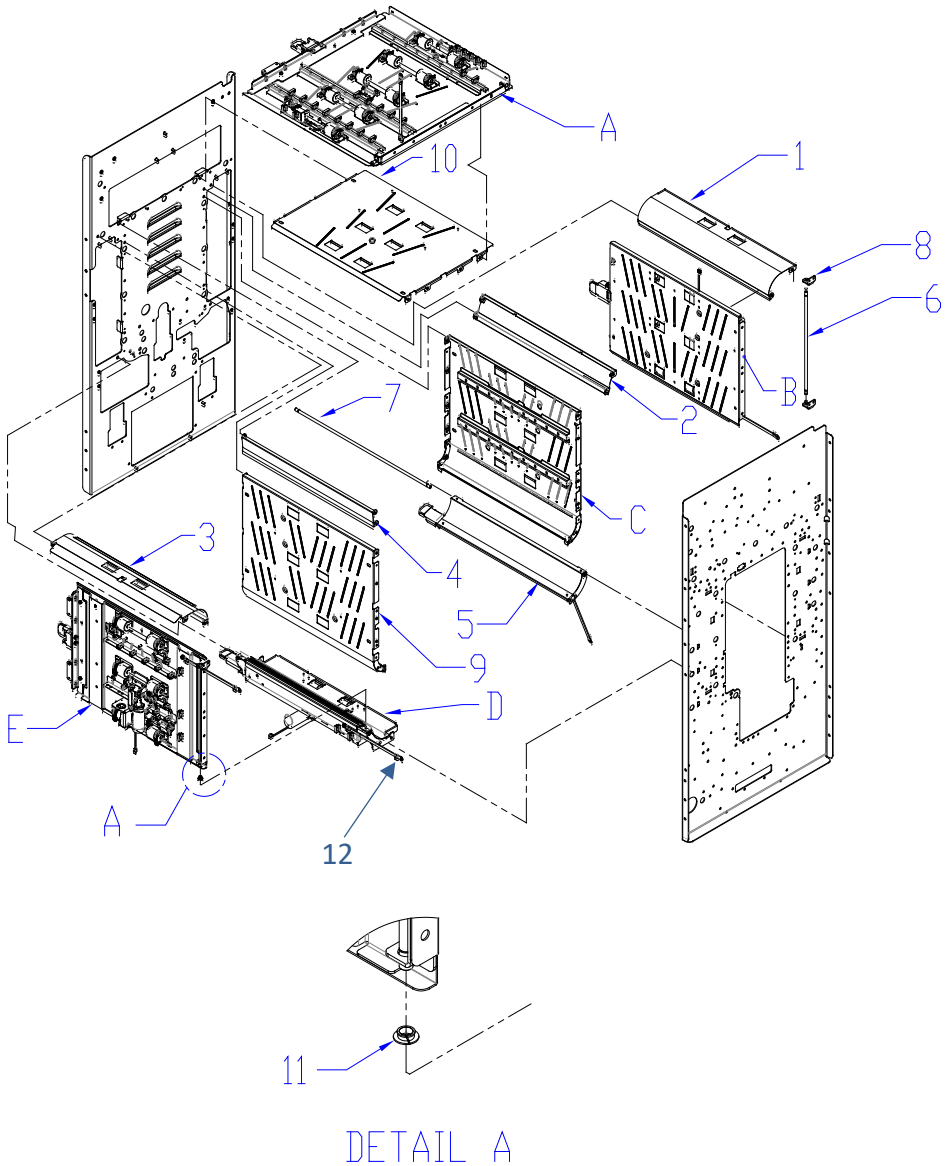

ITEM	GBC Part #	DESCRIPTION	QTY
A	PL 5.5	UPPER BYPASS PANEL	1
B	PL 5.2	ENTRANCE IDLER PANEL	1
C	PL 5.1	ENTRANCE DRIVE PANEL	1
D	PL 5.3	ACCELERATION IDLER PANEL	1
E	PL 5.4	EXIT IDLER PANEL	1
1	7715101	PANEL, ENTRANCE, LOWER	1
2	7715102	PANEL, ENTRANCE, INNER	1
3	7715146	PANEL, EXIT, LOWER	1
4	7715153	PANEL, EXIT, INNER	1
5	7724137	PANEL ASSEMBLY, LOWER, EXIT	1
6	7715209	SHAFT, IDLER PANEL HINGE	2
7	7715210	SHAFT,IDLR PANEL HINGE,LONG	2
8	7715251	BRACKET, IDLER PANEL MOUNT	6
9	7715150	PANEL WELDMENT, DRIVE, EXIT	1
10	7715128	PANEL WLDMNT, BYPASS,LOWER	1
11	1821209	SNAP-IN BEARING, 6MM ID [Qty. (2) used on all Idler panels- #A, #B, #D, #E and #5	10
12	7718619	SHAFT, IDLER PANEL HINGE, OFFSET GROOVE, LONG	1

PL 2.2. Frame Assembly- Front side

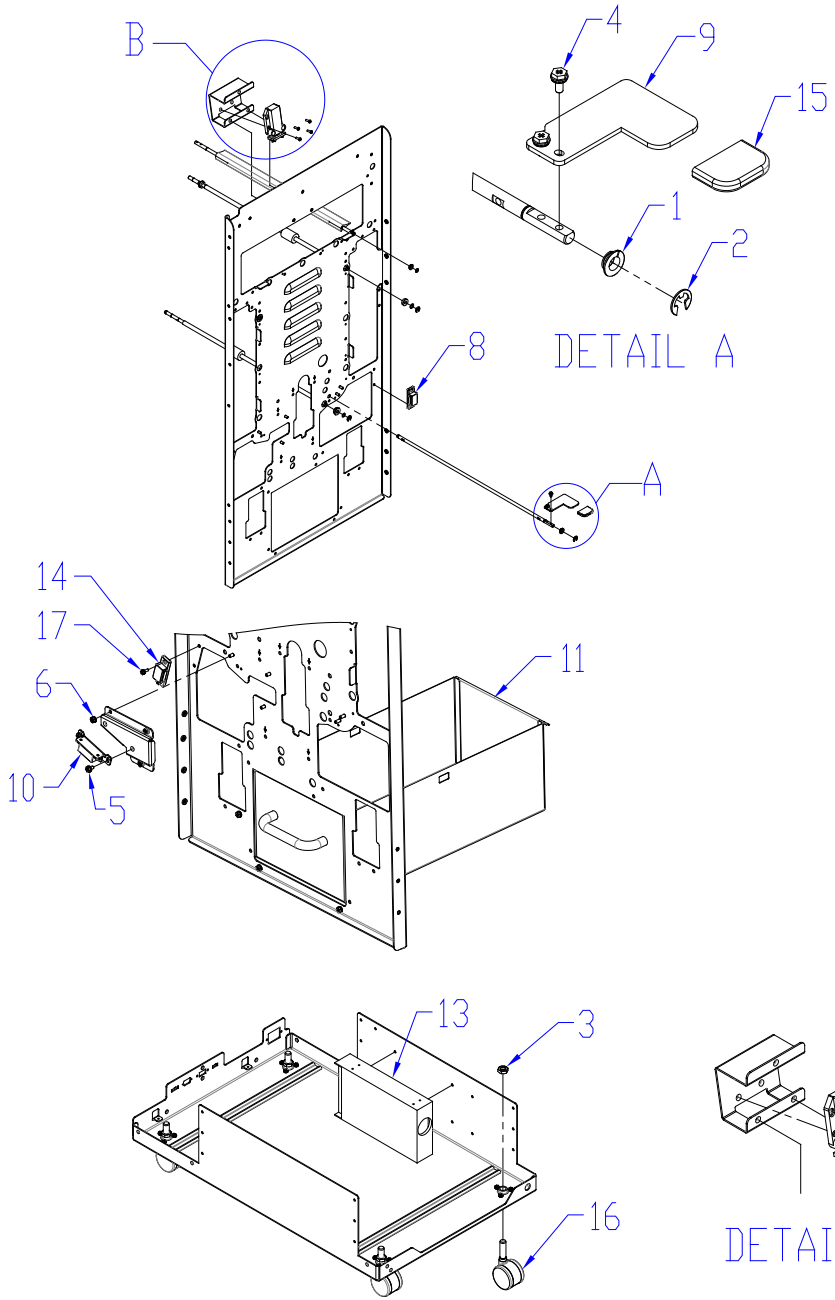

ITEM	GBC Part #	DESCRIPTION	QTY
1	1821209	Snap-in Bearing, 6mm ID	2
2	1822202	E-RING, JE-5	4
3	1823711	JAM NUT, M16X2.0	4
4	1823901	SCREW, HX, W/SEMS,M3X6	2
5	1823909	SCREW, HX, W/SEMS M4X6	2
6	1824001	NUT, KEPS M4	3
7	1821606	SCREW, PHILLIPS PAN HD, M3X10	6
8	7715195	MAGNET, PANEL, OPEN, STRONG	1
9	7715215	HANDLE, ACCEL IDLER LATCH	1
10	7715385	MAGNET, BRACKET, ASSY	1
11	7715427	CHIP TRAY, ASSEMBLY	1
12	7715650	LATCH, BYPASS	1
13	7715637	POWER SUPPLY, 24V, MW SP 480,	1
14	7715789	MAGNET, PANEL, OPEN, WEAK	3
15	7708163	CAP, RUBBER, RAIN BLUE	2
16	7723799	CASTER, ADJUSTABLE, ASSY, KM	4
17	1823913	SCREW, HX, W/SEMS, M3 X 8	8

PL 2.3. Frame Assembly- Rear Side

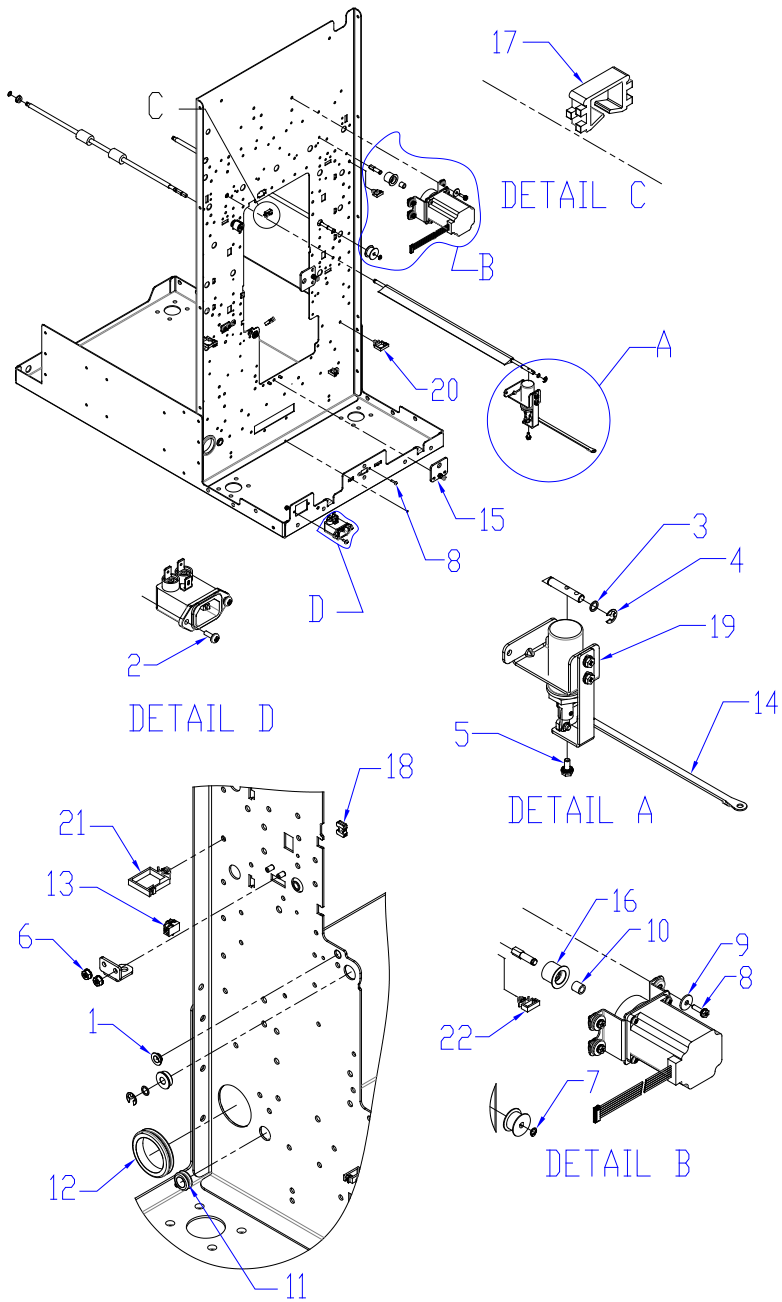

ITEM	GBC Part #	DESCRIPTION	QTY
1	1821209	Snap-in Bearing, 6mm ID	2
2	1821611	SCREW, PHILLIPS HD W/SEMS, M3X10	2
3	1822005	WASHER, FLAT, 6.025 X 8 X 0.75	2
4	1822202	E-RING, JE-5	7
5	1823910	SCREW, PHILLIPS HX HD W/SEMS M4 X 14	12
6	1824001	NUT, KEPS M4	32
7	1825501	RETAINING RING, 6MM SHAFT	15
8	1902863	SCREW,MACHINE PAN #4-40x15/32 PHILLIPS	2
9	1925044	WSHR, .192 ID X .625 OD X .060 T	20
10	1952208	SPACER, TIMING BELT IDLERS, BRONZE	4
11	1954011	GROMMET, 3/8 I.D X 1/2 O.D	11
12	1954032	GROMMET, 1 1/4 I.D. X 1 1/2 O.D.	1
13	7712703	WIRE HEADER CONNECTOR, 2 POS	6
14	7714679	GROUND STRAP, M4	1
15	7715185	BRACKET, PUNCH MODULE MOUNT	2
16	7715383	ROLLER, IDLER, DRIVE ASSY,	4
17	7715390	WIRE CLAMP, EDGE	1
18	7715445	WIRE CLAMP, EDGE, SMALL	2
19	7715813	SOLENOID, BRACKET, DIVERTER, SUB ASSY	1
20	7715818	WIRE SADDLE, MEDIUM, LOCKING TOP, V-0	10
21	7715819	WIRE SADDLE, LARGE, LOCKING TOP, V-0	8
22	7715817	WIRE SADDLE, SMALL, LOCKING TOP, V-0	32

PL 2.4. Frame Assembly- Drive Rollers

ITEM	GBC Part #	DESCRIPTION	QTY
1	7715093	ROLLER ASSY, DRIVE	11
2	7715097	ROLLER ASSY, ONE WAY CLUTCH DRIVE	1
3	1821116	BEARING, BALL, FLANGE 6X13X5, SUJ2	22
4	1822005	WASHER, FLAT, 6.025 X 8 X 0.75	22
5	1822202	E-RING, JE-5	26
6	7706532	BEARING BALL FLANGE	2
7	1925222	WASHER FLAT, 1/4X3/8X/1/32	2
8	7715862	ONE WAY CLUTCH SUB ASSEMBLY	1

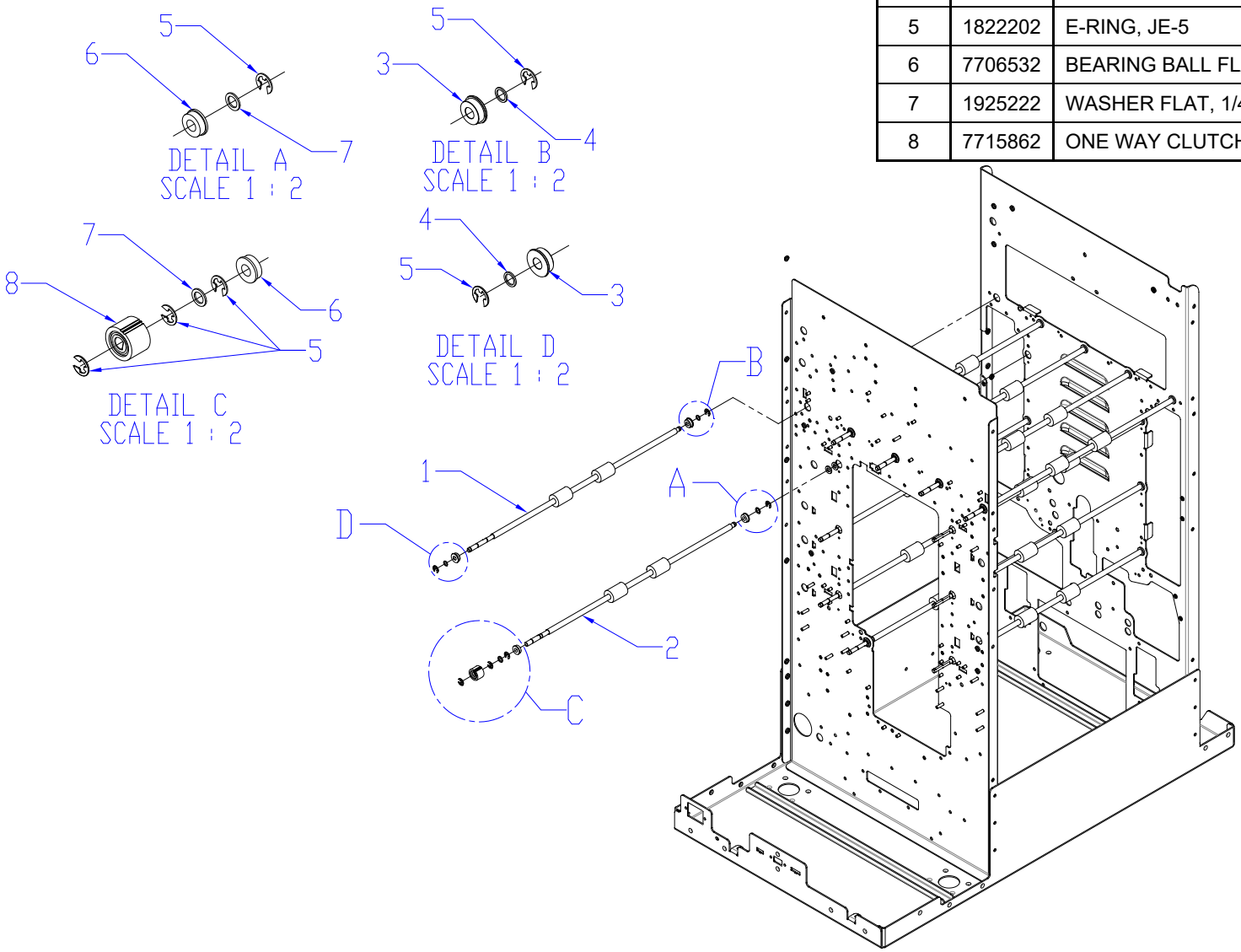

PL 2.5. Frame Assembly- Internal Parts

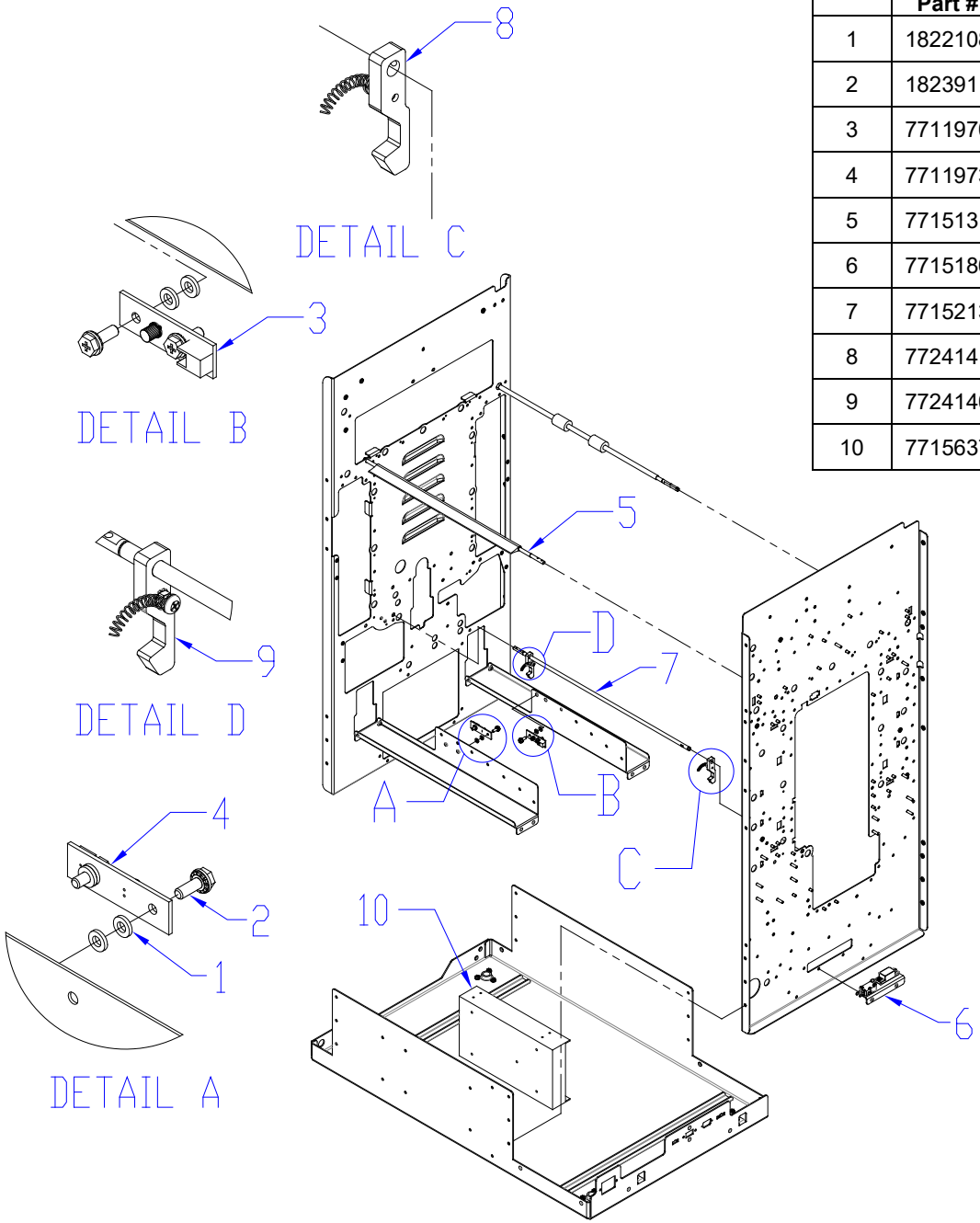

ITEM	GBC Part #	DESCRIPTION	QTY
1	1822108	WASHER, FLAT, 4.1X8X1.5	8
2	1823911	SCREW, PHILLIPS HX HD W/SEMS M4 X 10	4
3	7711970	EMITTER	1
4	7711973	RECEIVER	1
5	7715131	BYPASS DIVERTER	1
6	7715186	CHIP TRAY SENSOR MOUNT ASSY	1
7	7715213	SHAFT, ACCEL IDLER LATCH	1
8	7724141	LATCH, ASSY, REAR, ACCEL IDLER PANEL	1
9	7724140	LATCH, ASSY, FRONT, ACCEL IDLER PANEL	1
10	7715637	POWER SUPPLY, 24V, MW SP 480,	1

PL 2.6. Frame Assembly- Motors and Motor Drivers

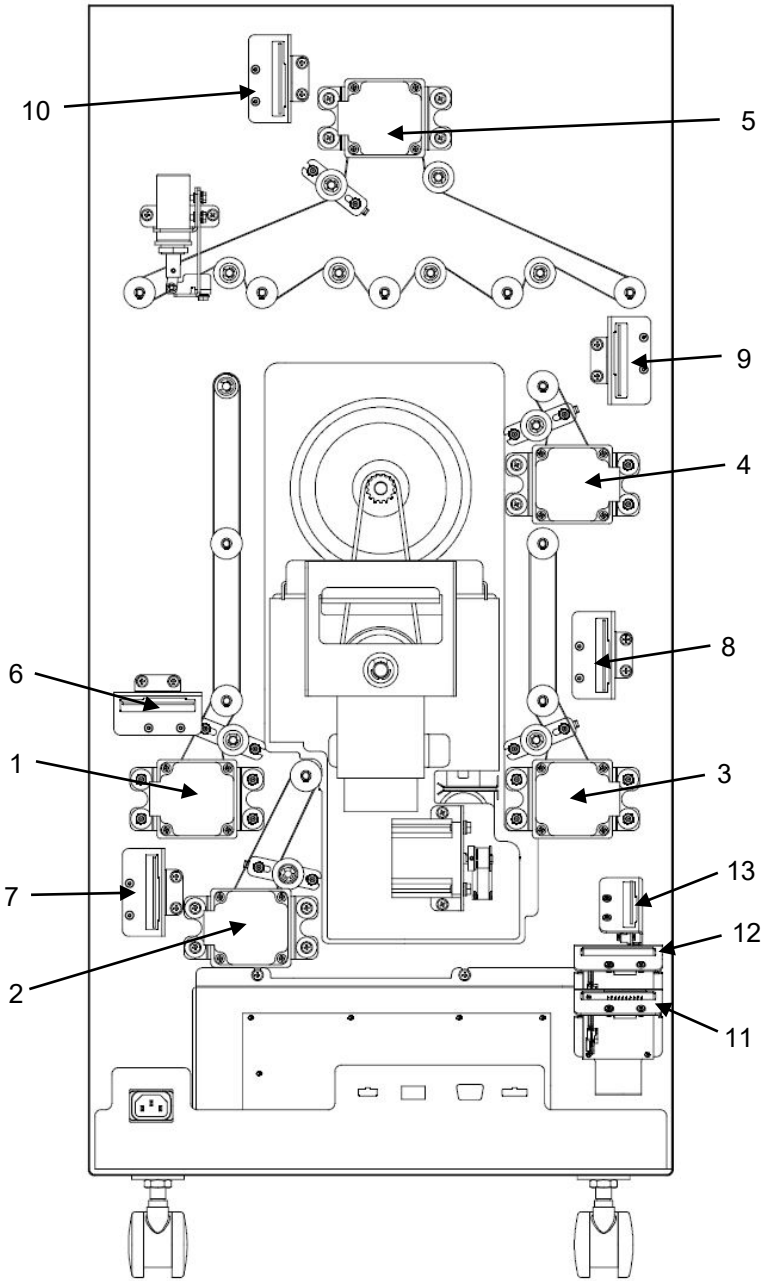

ITEM	GBC Part #		DESCRIPTION	QTY
1	7715159	M1	ENTRANCE MOTOR STEPPER AND MOUNT ASSY	1
2	7715159	M2	ACCEL MOTOR STEPPER AND MOUNT ASSY	1
3	7715159	M6	EXIT MOTOR STEPPER AND MOUNT ASSY	1
4	7715159	M7	DECEL MOTOR STEPPER AND MOUNT ASSY	1
5	7715159	M8	BYPASS MOTOR STEPPER AND MOUNT ASSY	1
6	7715275	DRV M1	M1 STEPPER DRIVER DRIVER AND BRACKET ASSY, TWO PHASE	1
7	7715275	DRV M2	M2 STEPPER DRIVER DRIVER AND BRACKET ASSY, TWO PHASE	1
8	7715275	DRV M6	M6 STEPPER DRIVER DRIVER AND BRACKET ASSY, TWO PHASE	1
9	7715275	DRV M7	M7 STEPPER DRIVER DRIVER AND BRACKET ASSY, TWO PHASE	1
10	7715275	DRV M8	M8 STEPPER DRIVER DRIVER AND BRACKET ASSY, TWO PHASE	1
11	7715275	DRV M3	M3 STEPPER DRIVER DRIVER AND BRACKET ASSY, TWO PHASE	1
12	7715275	DRV M4	M4 STEPPER DRIVER DRIVER AND BRACKET ASSY, TWO PHASE	1
13	7715275	DRV M5	M5 STEPPER DRIVER DRIVER AND BRACKET ASSY, TWO PHASE	1
SEE PL 6.3 FOR STEPPER MOTOR M3, M4 AND M5 POSITIONS				

PL 2.7. Frame Assembly- Sensors

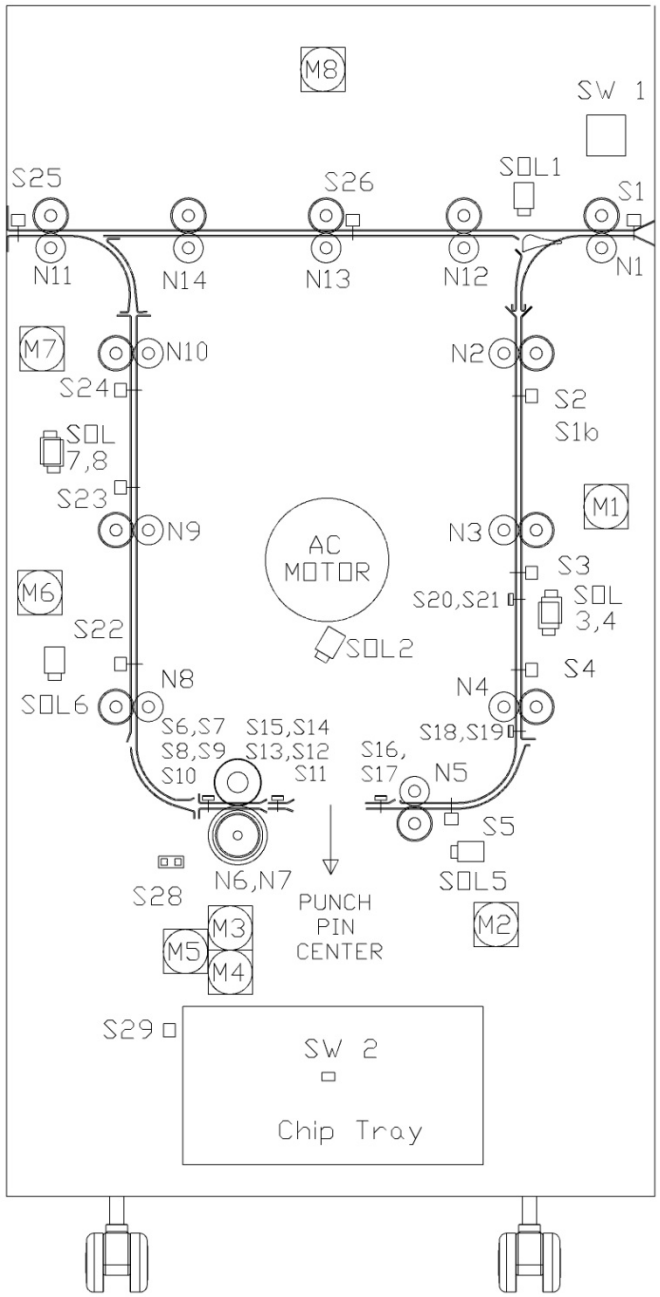

ITEM	GBC Part #		DESCRIPTION	QTY
1	7715627	S1	ENTRANCE SENSOR, S1	1
2	7715291	S2	ENTRANCE SENSOR, TOP	1
3	7715291	S3	ENTRANCE SENSOR, MIDDLE	1
4	7715291	S4	ENTRANCE SENSOR, BOTTOM	1
5	7715291	S5	ACCEL SENSOR	1
6	7715692	S6 S7 S8 S9 S10	SKEW SENSOR BOARD	1
7	Z7725728	S11 S12 S13 S14 S15	ALIGNMENT SENSOR BOARD, SWITCHABLE	1
8	7715696	S16 S17	BACKAGE SENSOR BOARD ASSY	1
9	7715696	S18 S19	MID PUNCH LARGE, SENSOR BACKAGE SENSOR BOARD ASSY	1
10	7715696	S20 S21	MID PUNCH X- LARGE, SENSOR BACKAGE SENSOR BOARD ASSY	1
11	7715291	S22	EXIT SENSOR, BOTTOM	1
12	7715291	S23	EXIT SENSOR, MIDDLE	1
13	7715291	S24	EXIT SENSOR, TOP	1
14	7715291	S25	EXIT SENSOR	1
15	7715291	S26	BYPASS SENSOR, MIDDLE	1
16	7715597	S28	ALIGN HOME SENSOR	1
17	7711970	S29	CHIP LEVEL SENSOR - EMITTER	1
	7711973	S29	CHIP LEVEL SENSOR - RECEIVER	1
18	7715774	S1B	CLEAR COVER SENSOR-EMITTER	1
	7711973	S1B	CLEAR COVER SENSOR-RECEIVER	1

PL 2.8. Frame Assembly- Solenoids / Switches

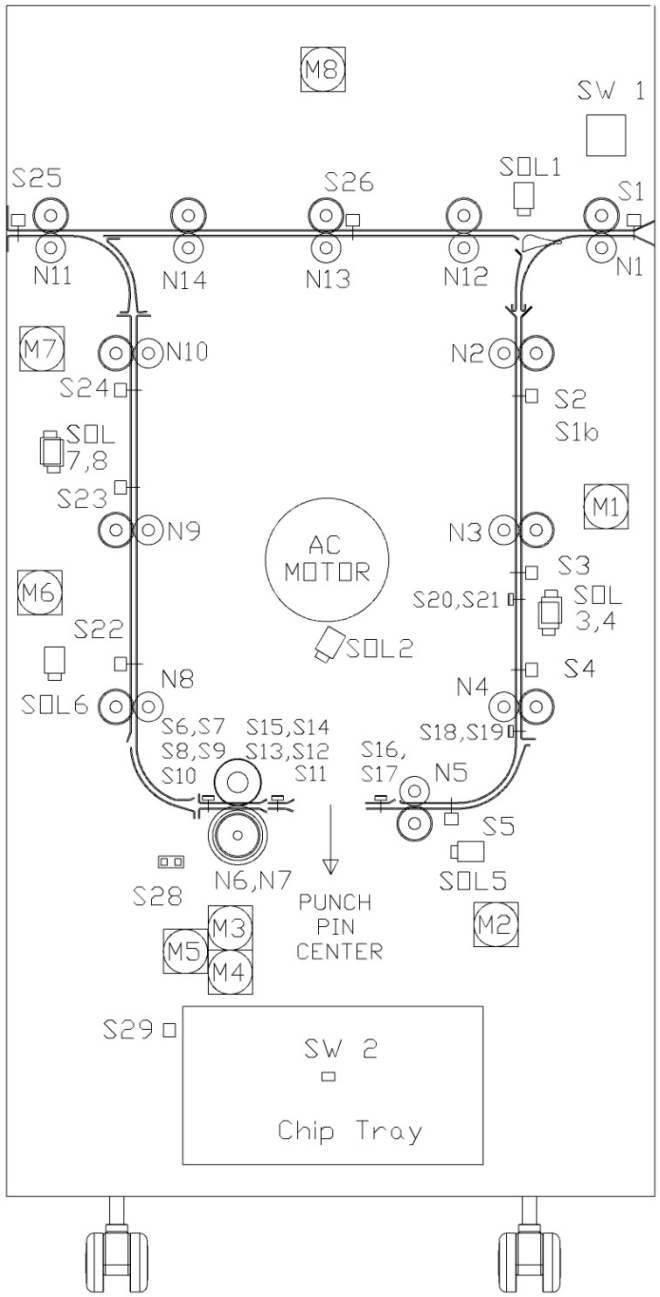

ITEM	GBC Part #		DESCRIPTION	QTY
1	7715813	SOL 1	DIVERTER SUBASSEMBLY	1
2	7715020	SOL 2	PUNCH CLUTCH	1
3	7724133	SOL 3	ENTRANCE IDLER SOLENOID, MIDDLE	1
4	7724133	SOL 4	ENTRANCE IDLER SOLENOID, BOTTOM	1
5	7724133	SOL 5	ACCELERATION ROLLER SOLENOID	1
6	7724133	SOL 6	EXIT IDLER SOLENOID, BOTTOM	1
7	7724133	SOL 7	EXIT IDLER SOLENOID, MIDDLE	1
8	7724133	SOL 8	EXIT IDLER SOLENOID, TOP	1
9	7610501	SW1	FRONT DOOR INTERLOCK SWITCH	1
10	7715186	SW2	CHIP TRAY HOME SWITCH ASSEMBLY	1

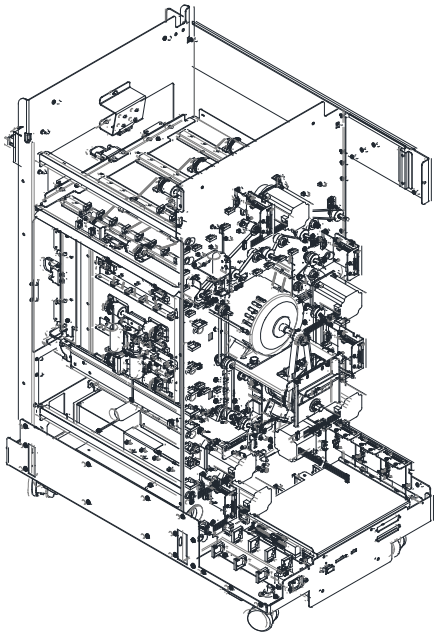

PL 2.9. Frame Assembly- Belts

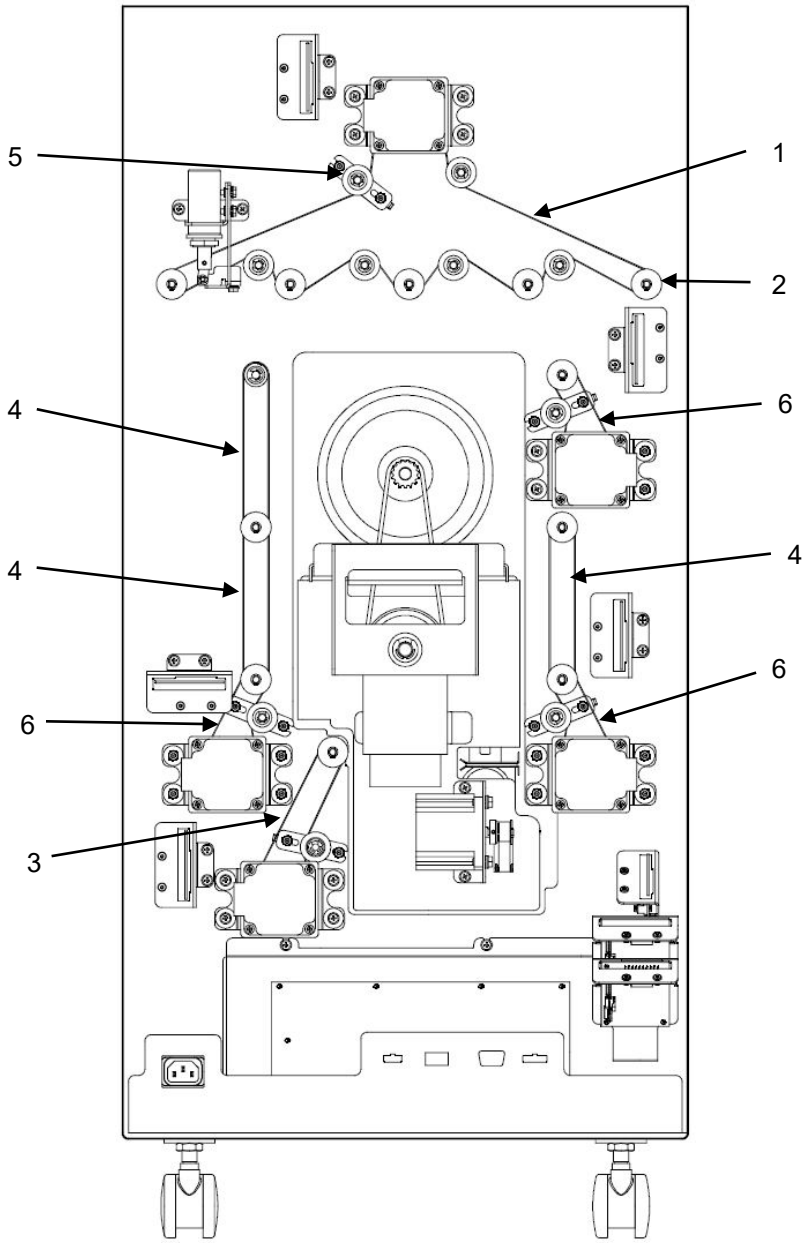

ITEM	GBC Part #	DESCRIPTION	QTY
1	7715202	BELT, 534T, 2MM 2GT	1
2	7715204	PULLEY,TIMING,2MM 2GT,30T	14
3	7715206	BELT, 179T, 2MM 2GT	1
4	7715243	BELT, 150 T, 2MM 2GT	3
5	7715245	TENSIONER ASSEMBLY	5
6	7715246	BELT, 134T, 2MM 2GT	3

Paper Path

PL 3.1. Paper Path- Entrance Drive Panel

ITEM	GBC Part #		DESCRIPTION	QTY
1	1824002		NUT, KEPS, M3	6
2	7711973		RECEIVER	1
3	7715696	S18 S19	MID PUNCH, LARGE, SENSOR BOARD BOARD ASSY, BACKGAGE SENSOR	1
	7715696	S20 S21	MID PUNCH, X LARGE, SENSOR BOARD BOARD ASSY, BACKGAGE SENSOR	1
4	7715871		PANEL WLDMNT,DRIVE,ENTRANCE,SERVICE	1
5	1822108		WASHER, FLAT, 4.1X 8X1.5	4
6	1822117		WASHER, 3.2ID, 8OD, 0.75MM THICK	12
7	1823903		SCREW, PHILLIPS, HX HD M4X8	2

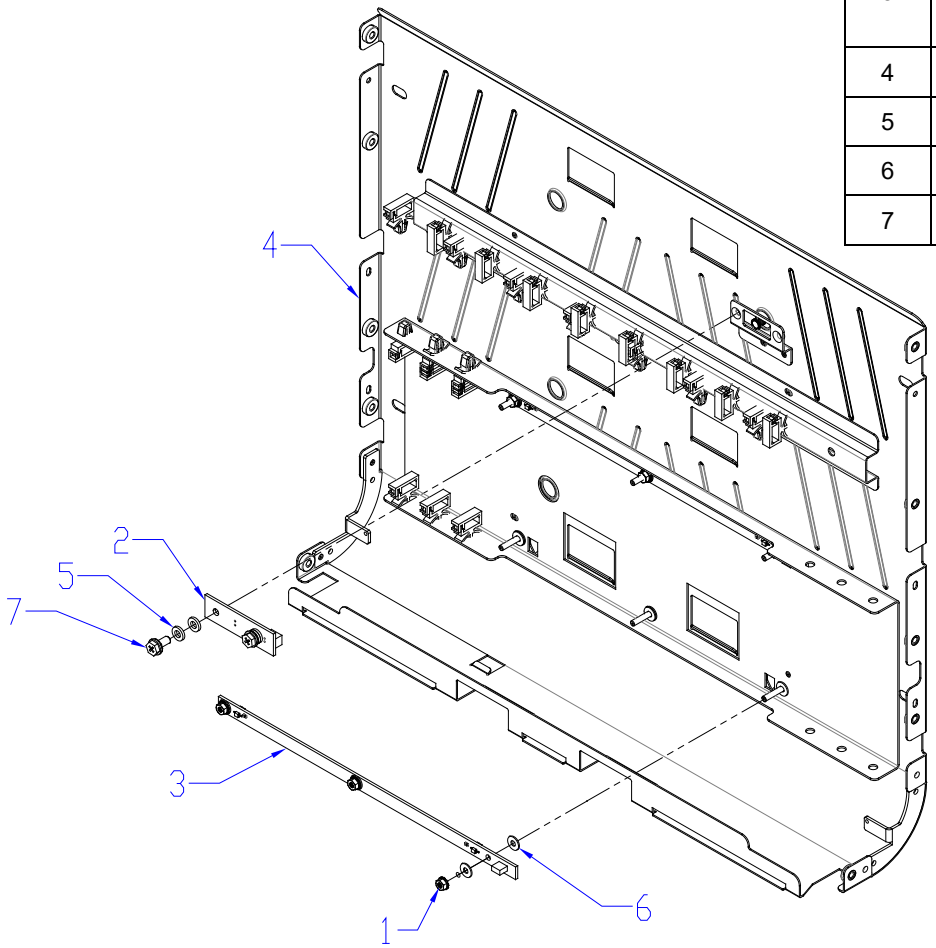

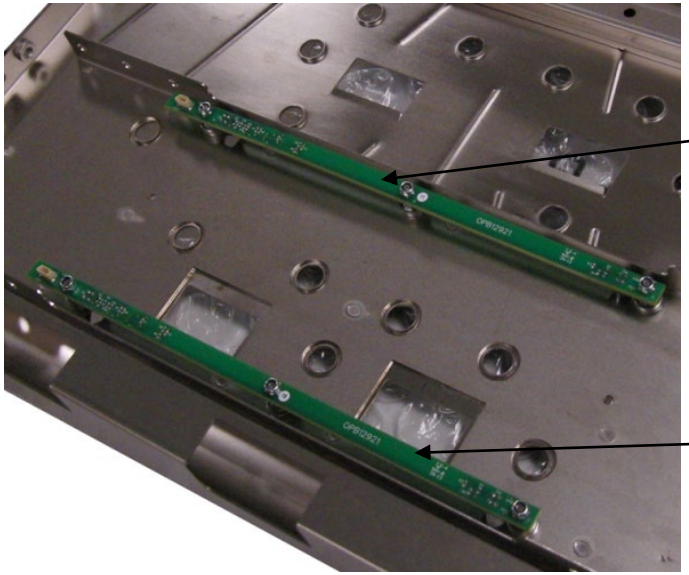

PL 3.2. Paper Path- Entrance Idler Panel

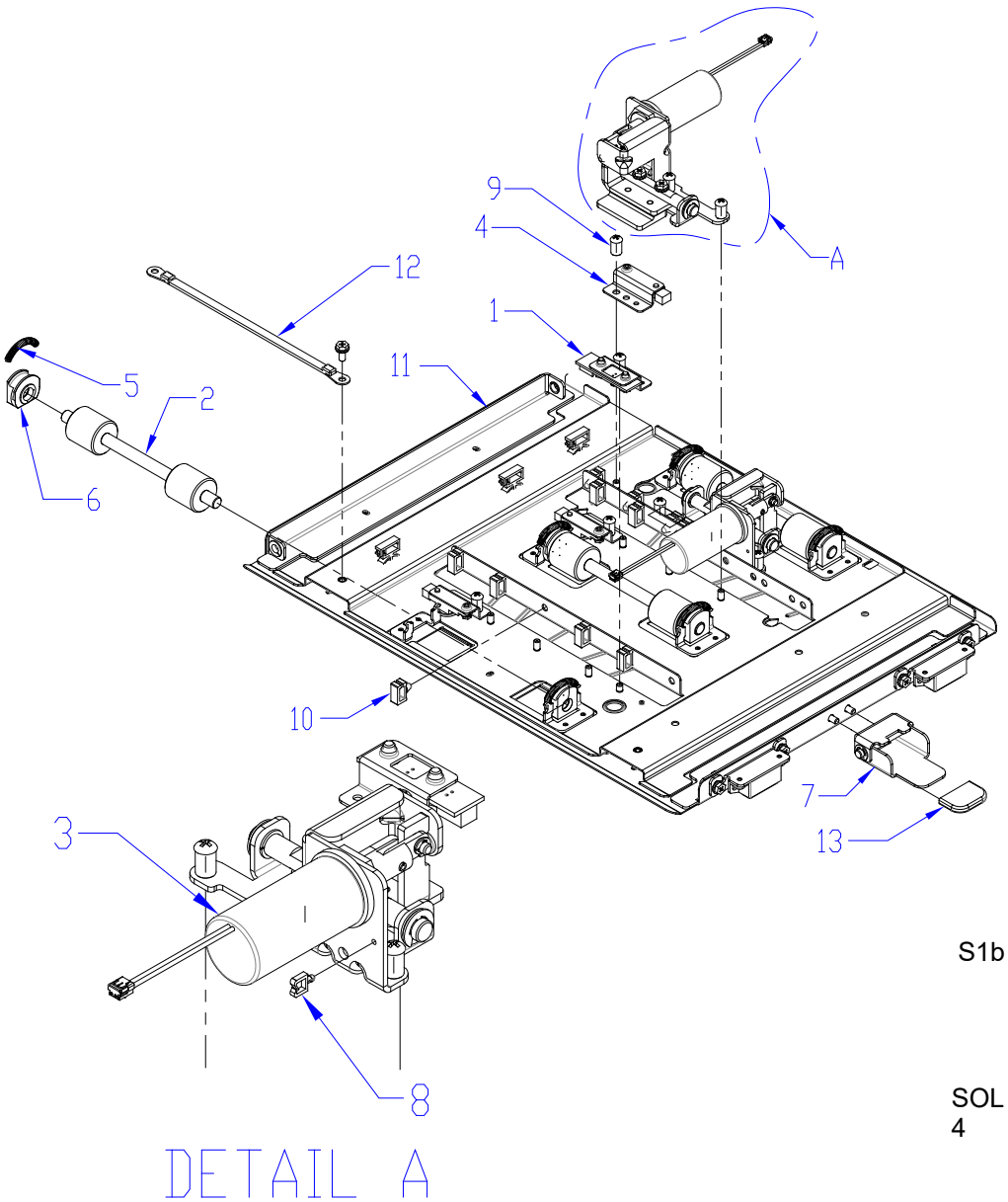

ITEM	GBC Part #		DESCRIPTION	QTY
1	7711970	S1b	EMITTER	1
2	7715103		ROLLER ASSY, IDLER	3
3	7724133	SOL3 SOL4	MODULE,SOLENOID,DISENGAGING ROLLER	2
4	7715291	S2 S3 S4	SENSOR AND BRACKET ASSY	3
5	7717410		SPRING,TRANSPORT IDLR ROLLER	6
6	7715382		BEARING HOUSING	6
7	7715384		HANDLE ASSY, IDLER PANELS	1
8	7715625		WIRE SADDLE, SHORT	2
9	7715629		SCREW, BARREL, M4, 7MM DEEP	13
10	7715639		WIRE SADDLE,SMALL,SIDE OPEN	11
11	7715873		PANEL WLDMT,IDLER,ENTRY	1
12	7714679		GROUND STRAP, M4	1
13	7708163		CAP, RUBBER	1

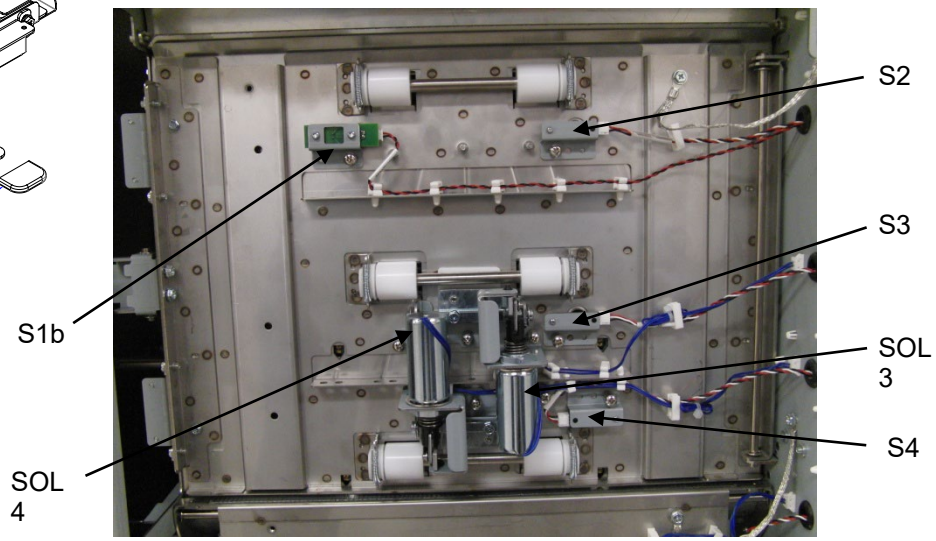

PL 3.3. Paper Path- Acceleration Roller Idler

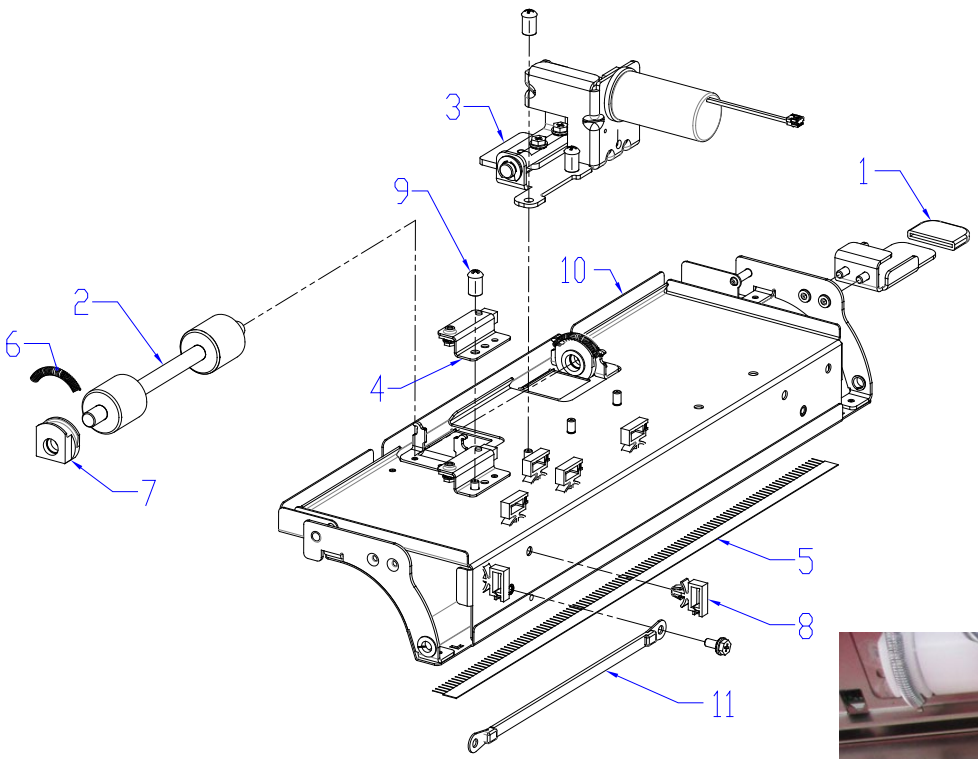

ITEM	GBC Part #		DESCRIPTION	QTY
1	7708163		CAP, RUBBER	1
2	7715103		ROLLER ASSY, IDLER	1
3	7724133	SOL5	MODULE, SOLENOID, DISENGAGING ROLLER	1
4	7715291	S5	SENSOR AND BRACKET ASSY	1
5	7718593		BRUSH, ANTI STATIC	1
6	7717410		SPRING,TRANSPORT IDLR ROLLER	2
7	7715382		BEARING HOUSING ASSY	2
8	7715817		WIRE SADDLE, SMALL	5
9	7715629		SCREW, BARREL, M4, 7MM DEEP	4
10	7715875		PANEL WLDMNT, IDLER, ACCEL	1
11	7714679		GROUND STRAP, M4	1

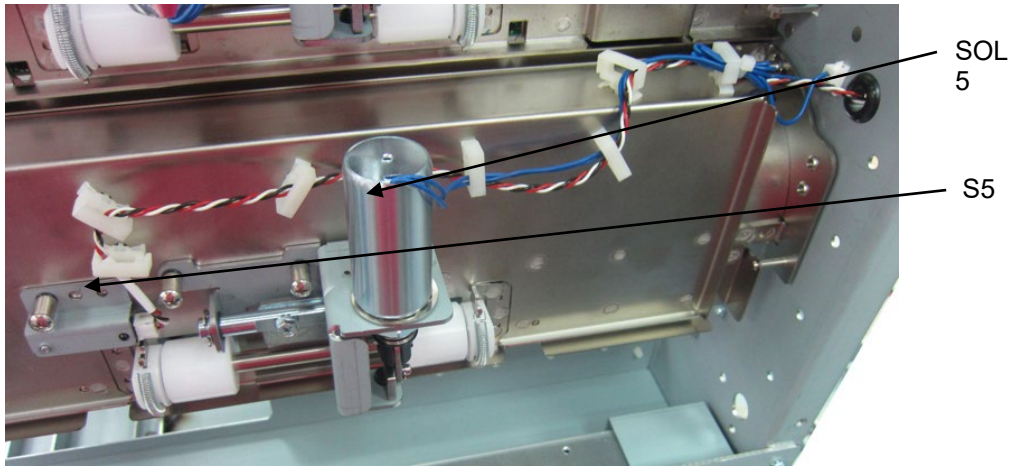

PL 3.4. Paper Path- Exit Idler Panel

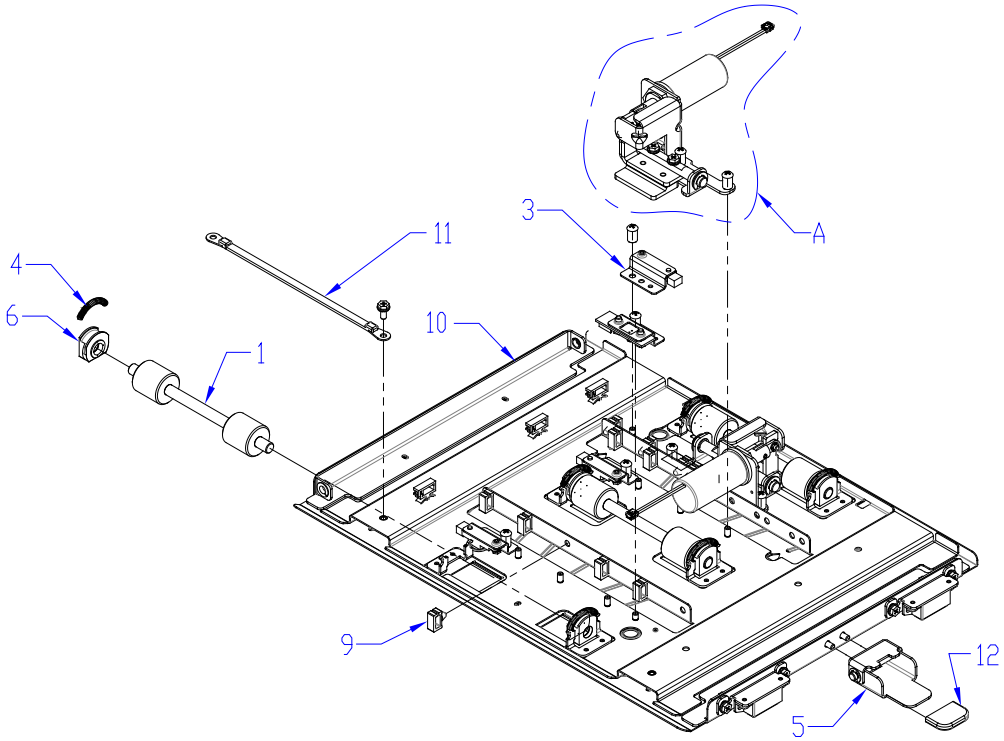

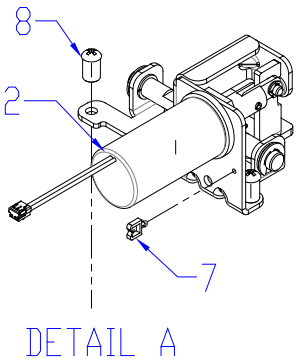

ITEM	GBC Part #		DESCRIPTION	QTY
1	7715103		ROLLER ASSY, IDLER	3
2	7724134	SOL6 SOL7 SOL8	MODULE,SOLENOID, DISENGAGING ROLLER	3
3	7715291	S22 S23 S24	SENSOR AND BRACKET ASSY	3
4	7717410		SPRING,TRANSPORT IDLER ROLLERS	6
5	7715384		HANDLE ASSY, IDLER PANELS	1
6	7715382		BEARING HOUSING ASSY	6
7	7715625		WIRE SADDLE, SHORT	3
8	7715629		SCREW,BARREL,M4,7MM DEEP	12
9	7715639		WIRE SADDLE,SM,SIDE OPEN	8
10	7715874		PANEL WELDMENT,IDLER,EXIT	1
11	7714679		GROUND STRAP, M4	1
12	7708163		CAP, RUBBER	1

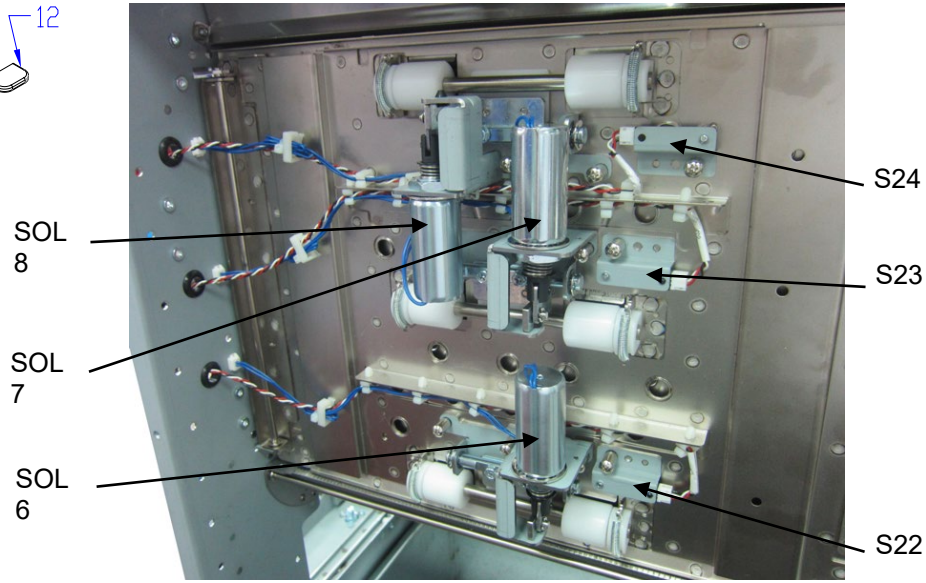

PL 3.5. Paper Path- Upper Bypass Panel

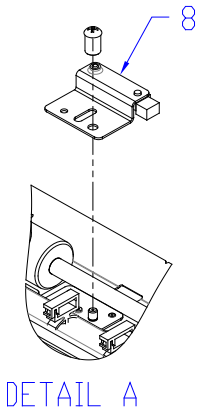

ITEM	GBC Part #		DESCRIPTION	QTY
1	1824002		NUT, KEPS, M3	1
2	7715103		ROLLER ASSY, IDLER	5
3	7715291	S25 S26	SENSOR AND BRACKET ASSEMBLY	2
4	7718594		BRUSH, ANTI-STATIC	1
5	7717410		SPRING, TRANSPORT IDLER ROLLER	10
6	7715382		BEARING HOUSING ASSY	10
7	7715384		HANDLE ASSY, IDLER PANELS	1
8	7715627	S1	SENSOR AND BRACKET ASSY,S1	1
9	7715629		SCREW, BARREL, M4, 7MM DEEP	3
10	7715872		PANEL WELDMENT, BYPASS, UPPER	1
11	7714679		GROUND STRAP, M4	1
12	7708163		CAP, RUBBER	1
13	1822117		WASHER, 3.2ID, 8OD, 0.75MM THICK	1

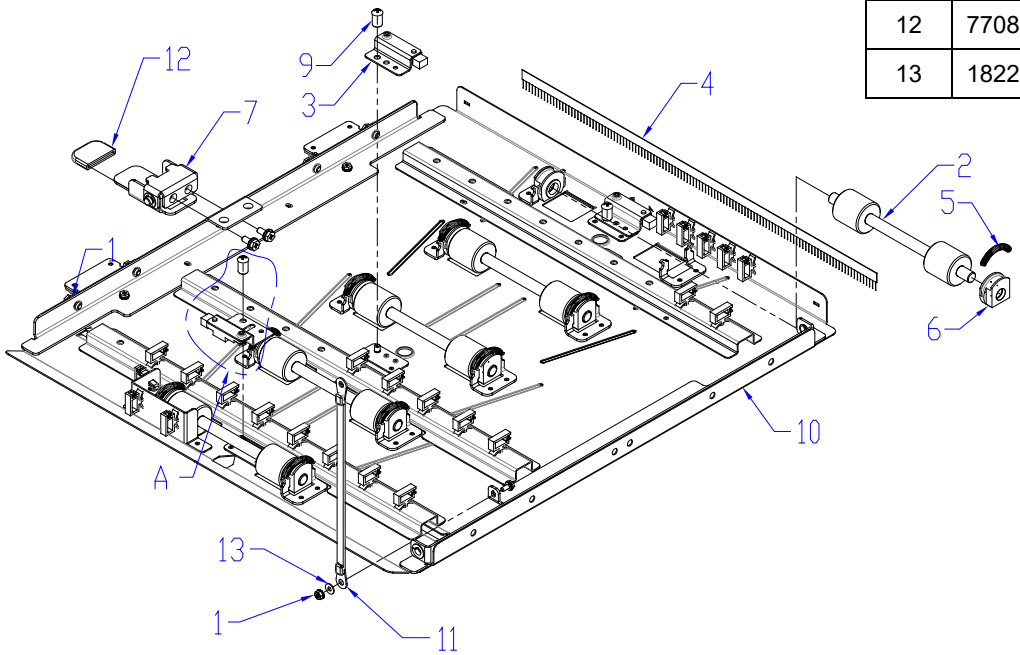

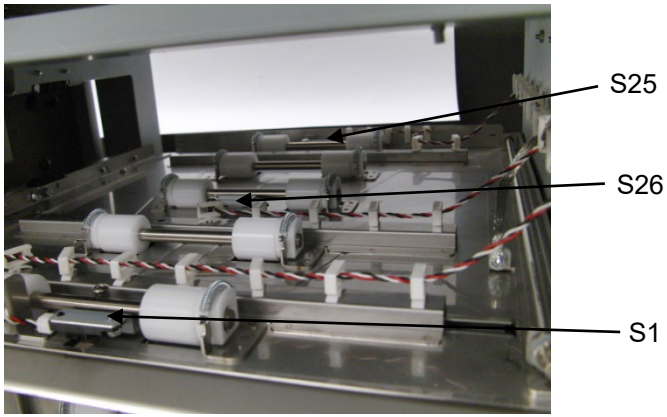

PL 3.6. Paper Path- Disengaging Roller Solenoid

ITEM	GBC Part #		Description	QTY
1	7724134	SOL 3 SOL 4 SOL 5 SOL 6 SOL 7 SOL 8	MODULE, SOLENOID, DISENGAGING ROLLER	6

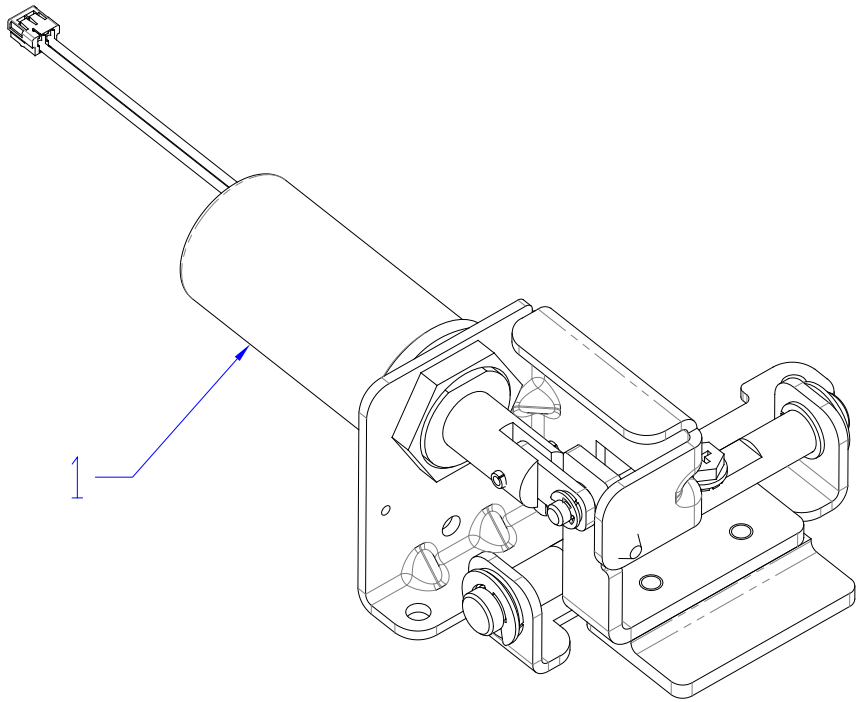

Punch Module

PL 4.1. Punch Module

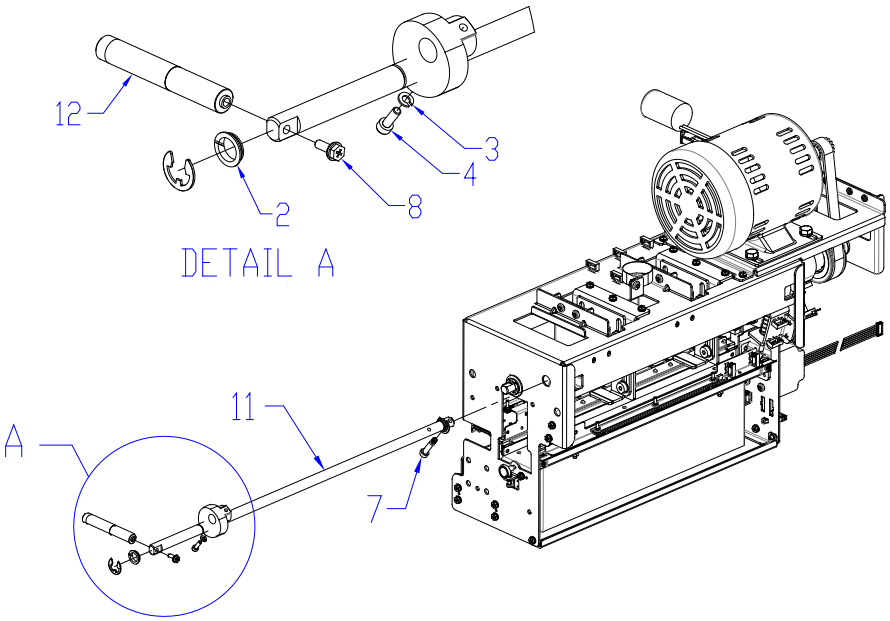

ITEM	GBC Part #		DESCRIPTION	QTY
	7723650	115V	PUNCH MODULE, ASSY, 115V	1
	7723651	230V	PUNCH MODULE, ASSY, 230V	1
1	1821118		BEARING,BALL,FLANGE,12X24X6,SUJ2	3
2	1821215		BEARING, CLIP, 12MM	2
3	1821802		Spring washer M4	2
4	1821532		SCREW, SHCS, M4 X 12	2
5	1822016		WASHER,NYLON, ID12.7, OD19, 1.5THK	2
6	1822205		E-RING, JE-10	5
7	1823203		SCREW,SOCKET,M5, 6MM SHOULDER	1
8	1823911		SCREW, PHILLIPS W/SEMS M4X10	1
9	1824003		NUT, KEPS, M6	1
10	7715033		STEERING MODULE SUB ASSY	1
11	7715237		SHAFT, DIE LOCK	1
12	7715368		HANDLE, DIE LOCK	1
13	7715818		WIRE SADDLE,MEDIUM,LOCK TOP,V-0	1
14	7715886		PUNCH MODULE SHELL, SERVICE	1

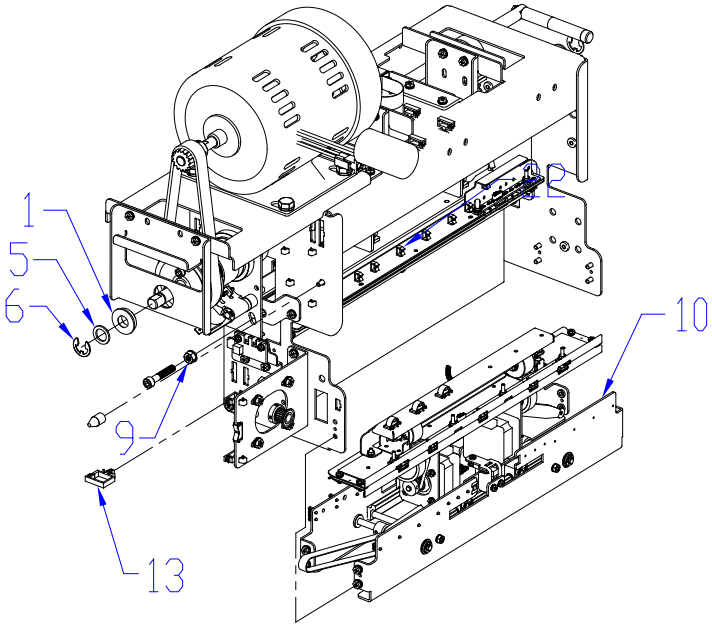

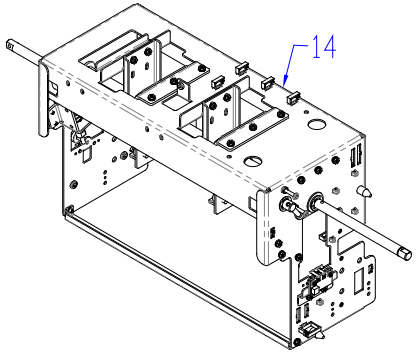

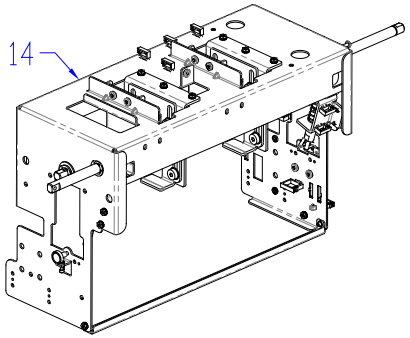

PL 4.2. Punch Module (continued)

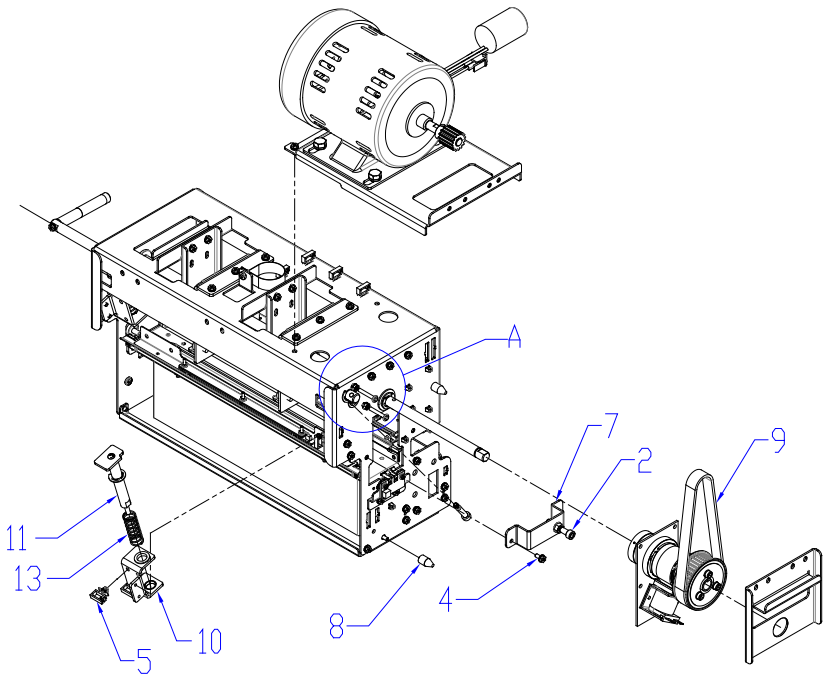

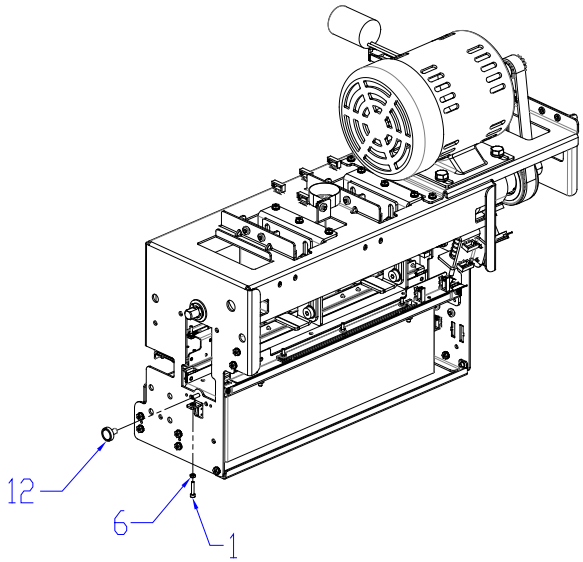

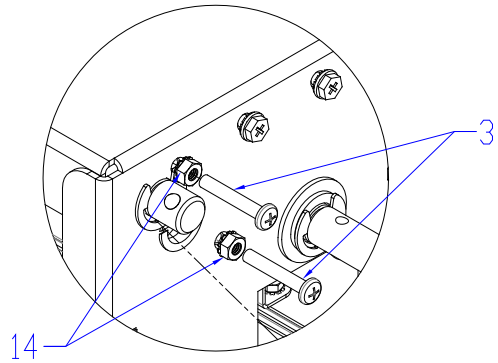

DETAIL A

ITEM	GBC Part #		DESCRIPTION	QTY
1	1821514		SHCS, M3X12	1
2	1821541		SCREW, SOCKET HD,M6,35MM LONG	1
3	1821655		SCREW, PHILLIPS, PAN HD, M4X25	2
4	1823903		SCREW, PHILLIPS, HX HD M4X8	54
5	1825203		WIRE SADDLE, SNAP TYPE, SMALL	2
6	1823701		NUT, HEX, M3	1
7	7715030		BRACKET, CLUTCH STUD	1
8	7715079		MOUNT PIN, PUNCH MODULE	2
9	7715232	115V	BELT, TIMING, 82 GROOVE, 5MM HTD	1
	7715372	230V	BELT, TIMING, 80 GROOVE, 5MM HTD	1
10	7715238		BRACKET & BEARING ASSY,DIE LOCK	2
11	7715239		PLUNGER & STRIPPER ASSY,DIE LOCK	2
12	7715320		MAGNET, DIE STOP	1
13	7715374		SPRING, DIE LOCK RETURN	2
14	1824001		NUT, KEPS M4	2
15	7724870		IDLER, PUNCH, CLAMP, ASM, SERVICE	1

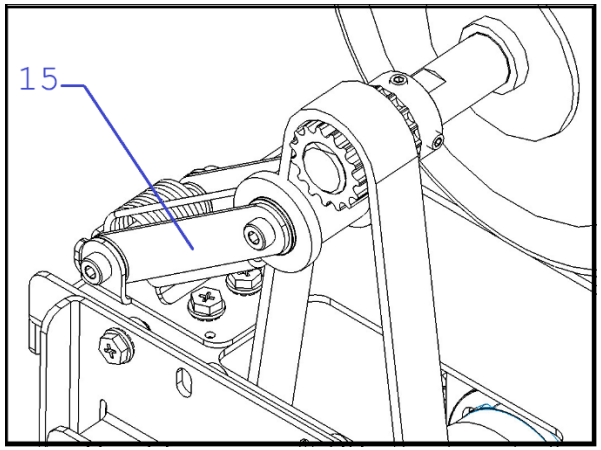

PL 4.3. Punch Module- Motors/Sensors

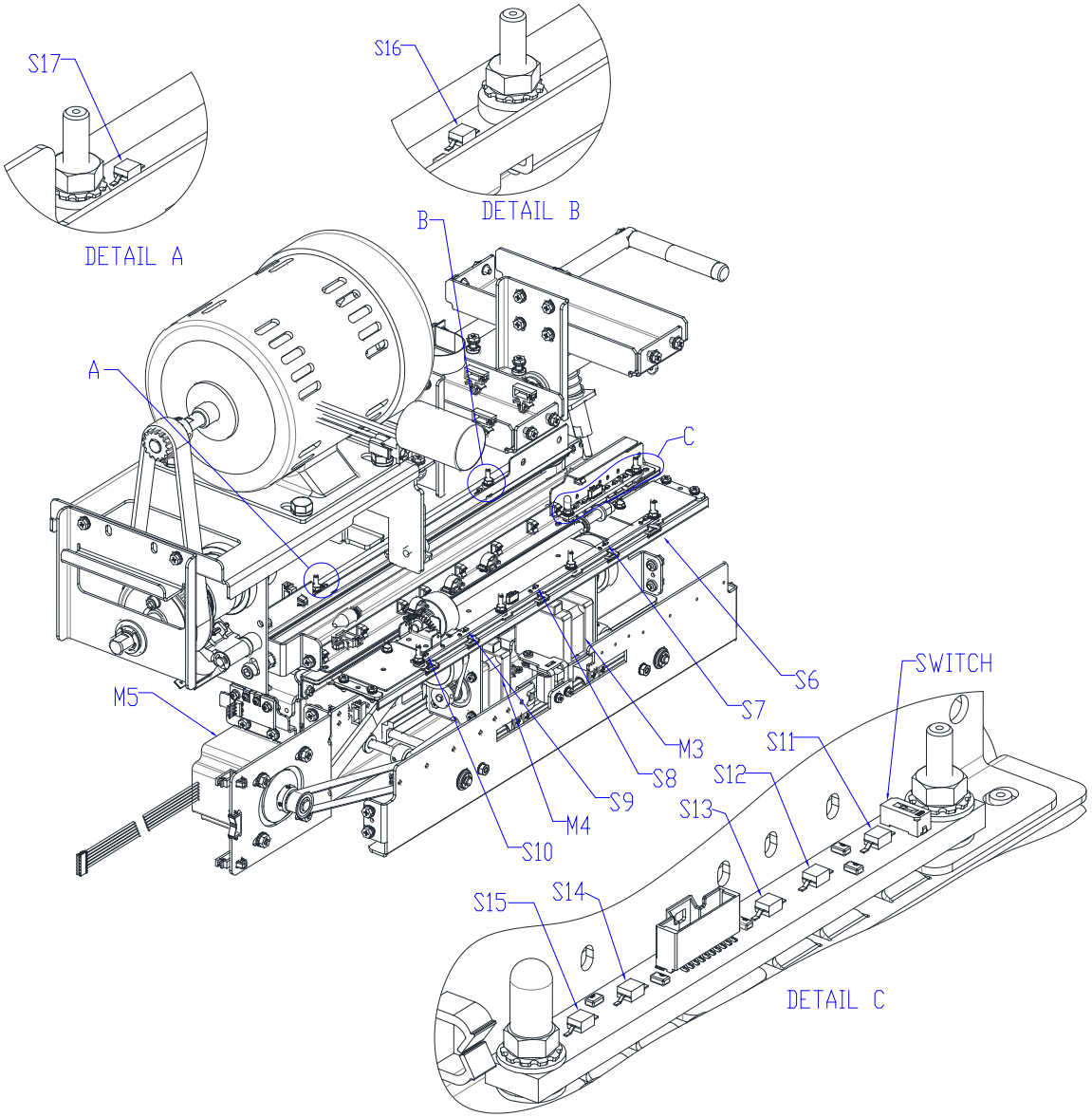

ITEM	GBC Part #		DESCRIPTION	QTY
1	7715857	M3	LEFT / FRONT STEERING MOTOR AND PULLEY.	1
2	7715857	M4	RIGHT / REAR STEERING MOTOR AND PULLEY.	1
3	7715859	M5	ALIGNMENT STEPPER MOTOR AND PULLEY.	1
4	7715692	S6 S7 S8 S9 S10	SKEW SENSOR BOARD	1
5	Z7725728	S11 S12 S13 S14 S15	ALIGNMENT SENSOR BOARD, SWITCHABLE	1
6	7715696	S16 S17	BACKAGE SENSOR BOARD	1

PL 4.4. Punch Module- Steering Module

ITEM	GBC Part #		DESCRIPTION	QTY
1	1823901		SCREW, PHILLIPS HX W/SEMS, M3X6	4
2	1823913		SCREW,PHILIPS-HEX LOCK, M3X8	4
3	1824002		NUT, KEPS, M3	1
4	7715445		WIRE CLAMP, EDGE, SMALL	1
5	7715597	S28	SENSOR, VEIN, BRACKET, SUB ASSLY	1
6	7715779		GROUND STRAP, STEERING CARRIAGE	1
7	7715877		ALIGNMENT CARRIAGE,SUB ASSY, SERVICE	1

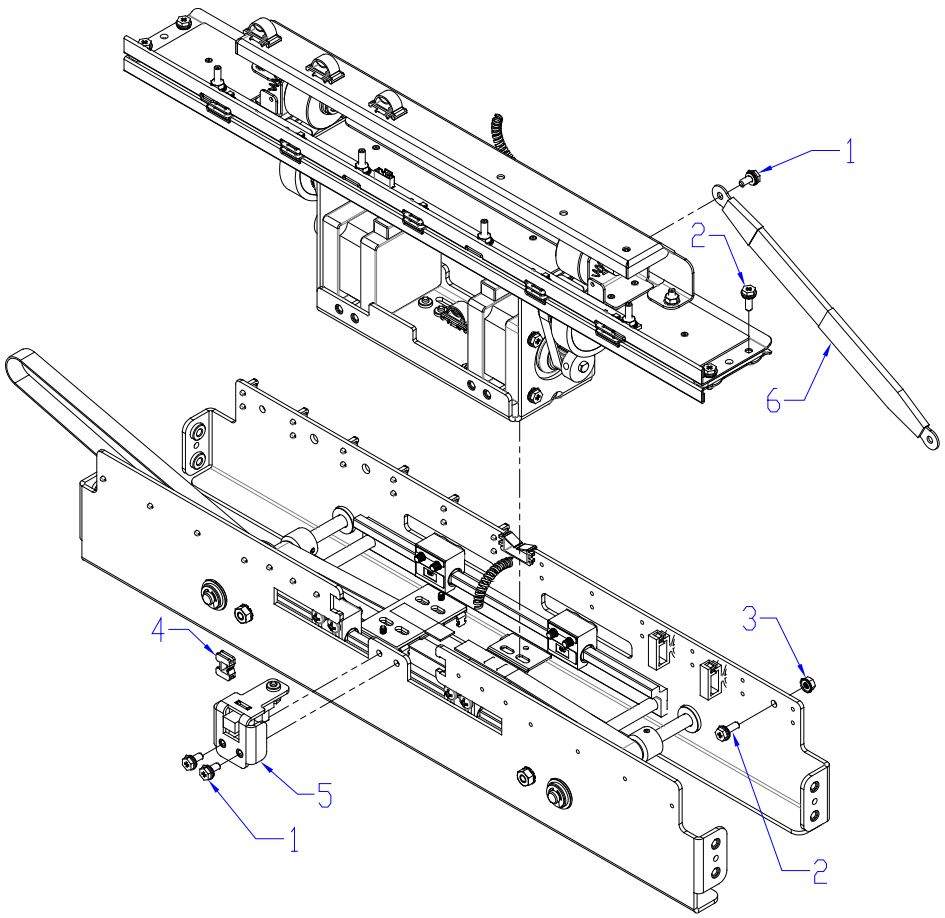

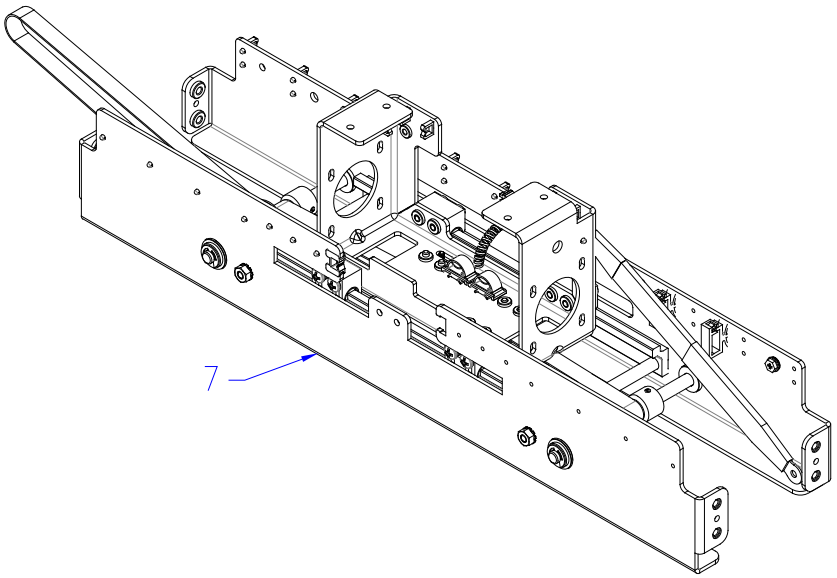

PL 4.5. Punch Module- Steering Module - Steering Idler Panel Sub Assembly

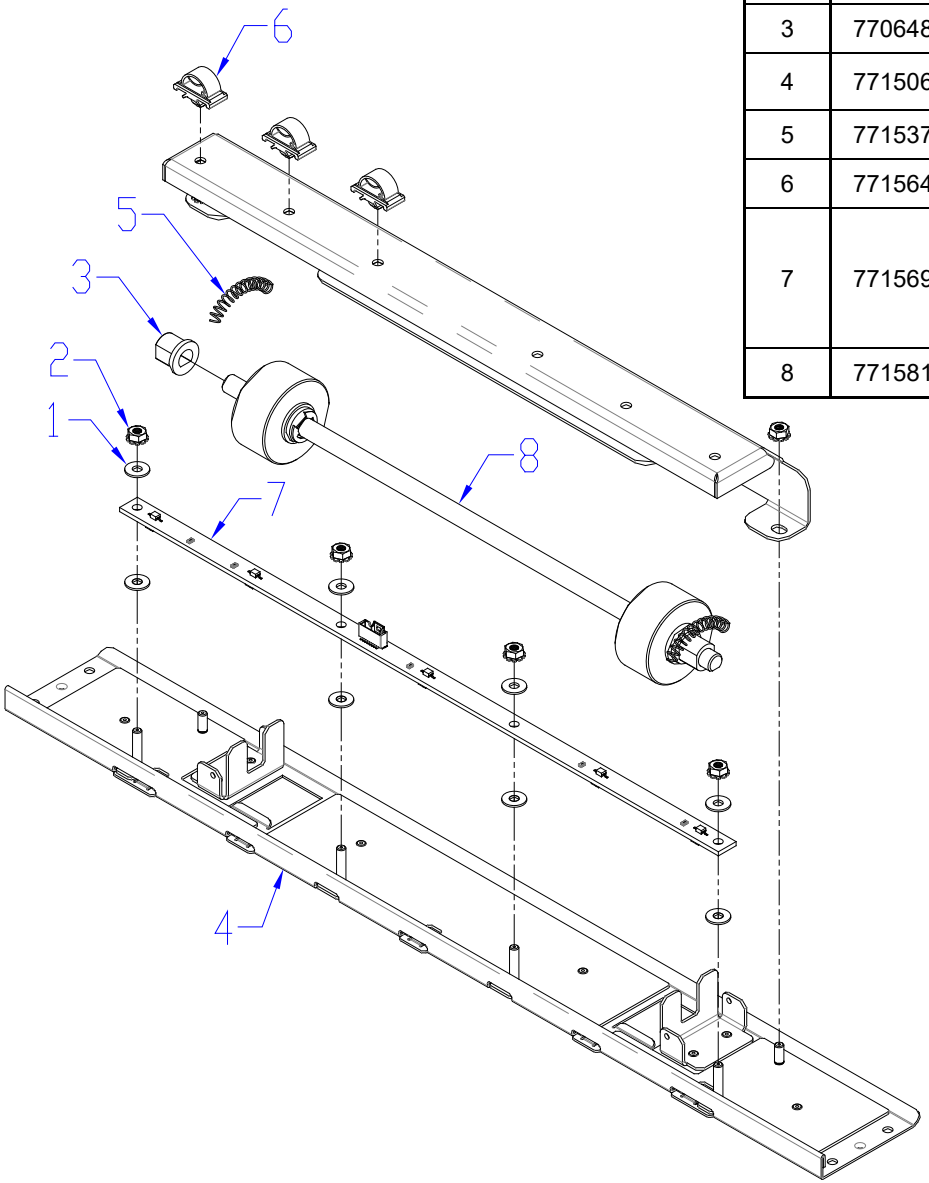

ITEM	GBC Part #		DESCRIPTION	QTY
1	1822117		WASHER, 3.2ID, 8OD, 0.75MM THK	8
2	1824002		NUT, KEPS, M3	6
3	7706488		BEARING, DOUBLE "D" FLANGE	2
4	7715062		PANEL WELDMENT,IDLER,STEERING	1
5	7715379		SPRING, STEERING IDLER ROLLER	2
6	7715648		WIRE CLAMP, LOCKING	3
7	7715692	S6 S7 S8 S9 S10	BOARD ASSY, SKEW SENSOR	1
8	7715816		ROLLER ASSY, IDLER, STEERING	1

PL 4.6. Punch Module- Steering Module - Drive Panel Steering

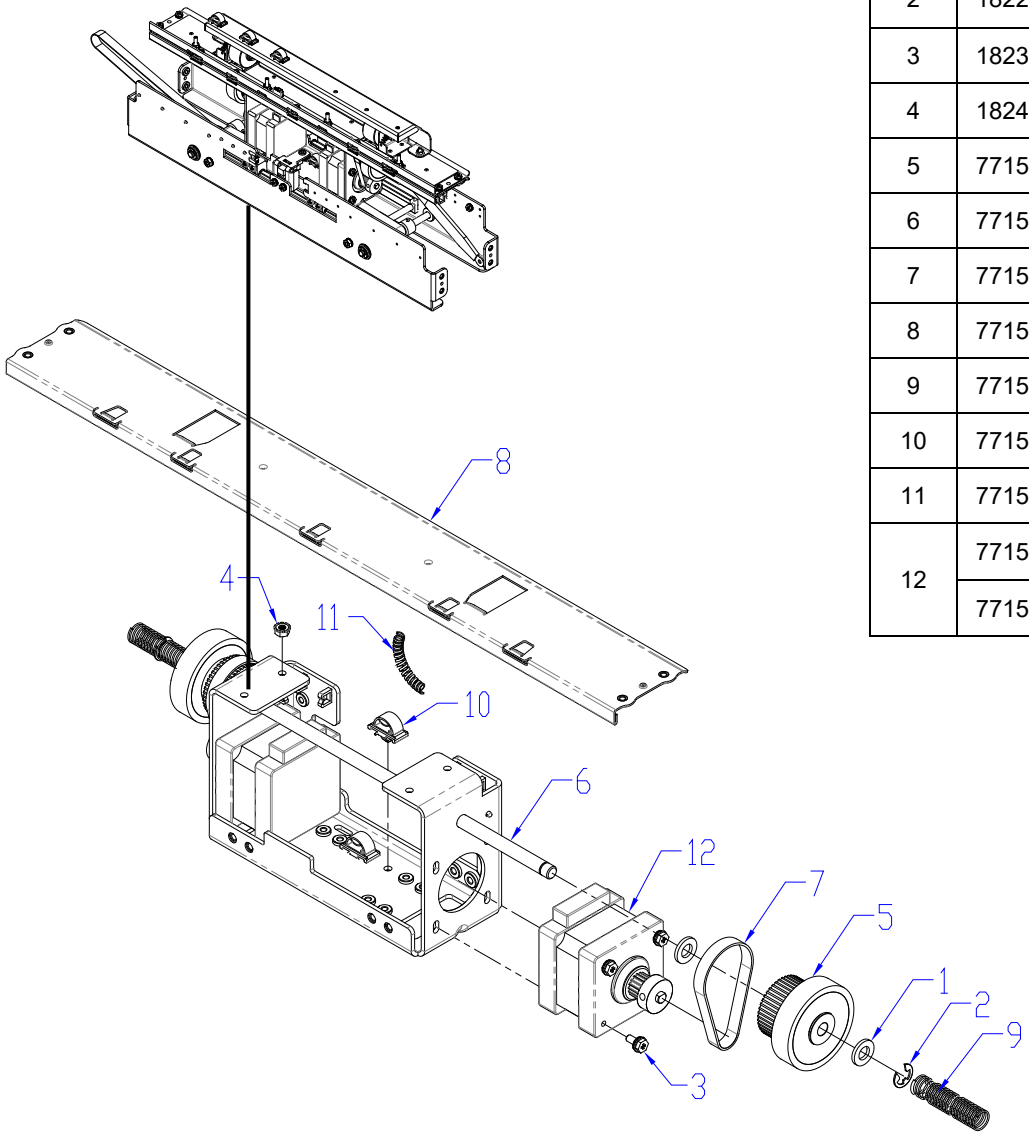

ITEM	GBC Part #		DESCRIPTION	QTY
1	1822008		WASHER, FLAT, 6.4X12X1.5	4
2	1822202		E-RING, JE-5	4
3	1823901		SCREW, PHILLIPS HX W/SEMS, M3X6	8
4	1824002		NUT, KEPS, M3	4
5	7715039		ROLLER ASSEMBLY, DRIVE, STEERING	2
6	7715044		SHAFT, STEERING DRIVE	1
7	7715047		BELT,STEERING,65 GROOVES,2MM 2GT	2
8	7715053		PANEL WELDMENT, DRIVE, STEERING	1
9	7715377		SPRING, STEERING DRIVE ROLLER	2
10	7715648		WIRE CLAMP, LOCKING	2
11	7715777		SLEEVE,SPIRAL, MOTOR WIRES	1
12	7715857	M3	STEPPER MOTOR AND PULLEY,STEERING, SERVICE	1
	7715857	M4	STEPPER MOTOR AND PULLEY,STEERING, SERVICE	1

PL 4.7. Punch Module- Stepper Alignment Bracket

ITEM	GBC Part #		DESCRIPTION	QTY
1	1823906		SCREW,PHILLIPS HX W/SEM M5X10	4
2	7715078		BRACKET,ALIGN STEPPER MOUNT	1
3	7715859	M5	STEPPER MOTOR AND PULLEY, ALIGNMENT, SERVICE	1

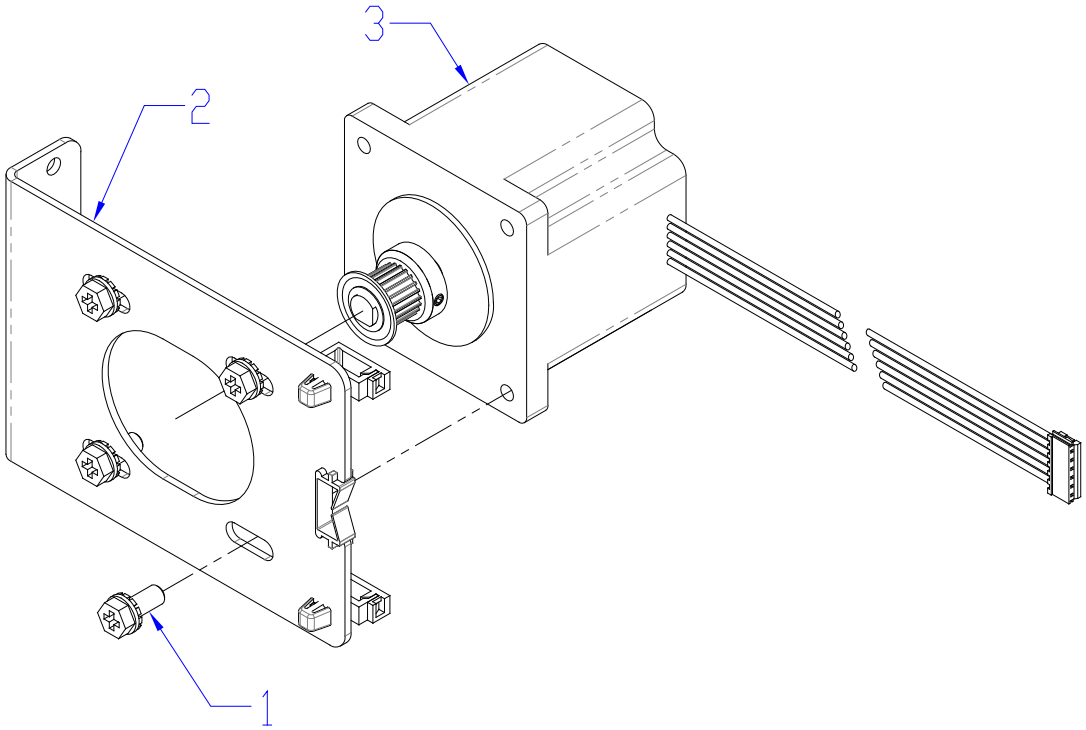

PL 4.8. Punch Module- Punch Clutch

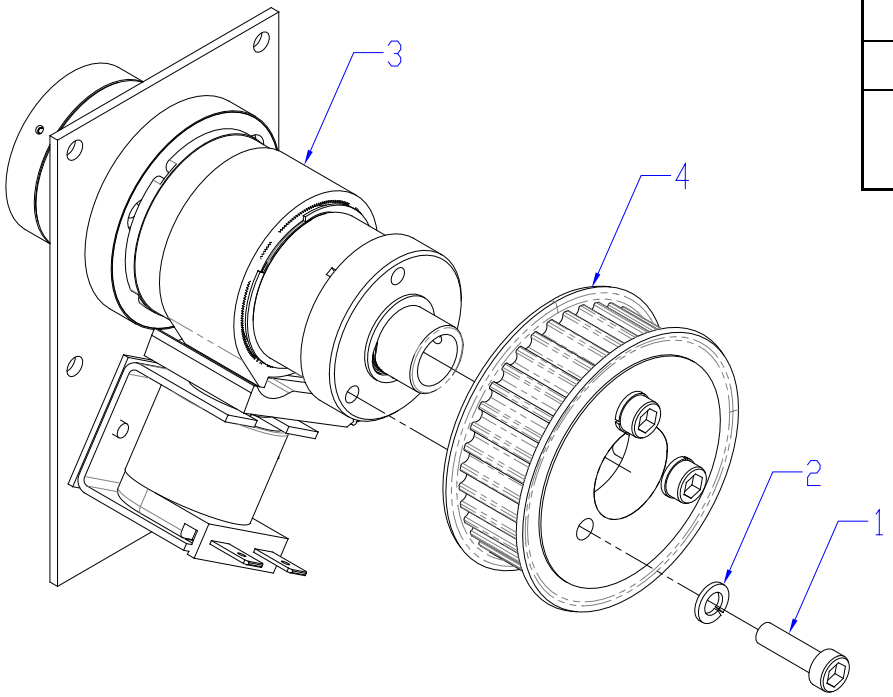

ITEM	GBC Part #		DESCRIPTION	QTY
1	1821531		SCREW, SHCS, M5X18	3
2	1821801		WASHER, SPLIT LOCK, M5	3
3	7715020		CLUTCH, WRAP SPRING	1
4	7715231	115V	PULLEY & FLANGE,5MM HTD,38T	1
	7715371	230V	PULLEY & FLANGE,5MM HTD,34T	1

PL 4.9. Punch Module- Die Set Recognition Reader Board

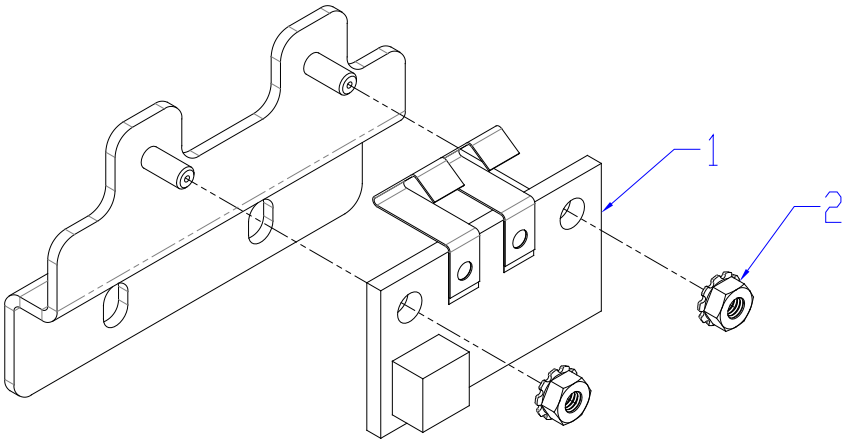

ITEM	GBC Part #	DESCRIPTION	QTY
1	7715347	BOARD, READER, DIE SET RECOGNITION	1
2	1824002	NUT, KEPS, M3	2

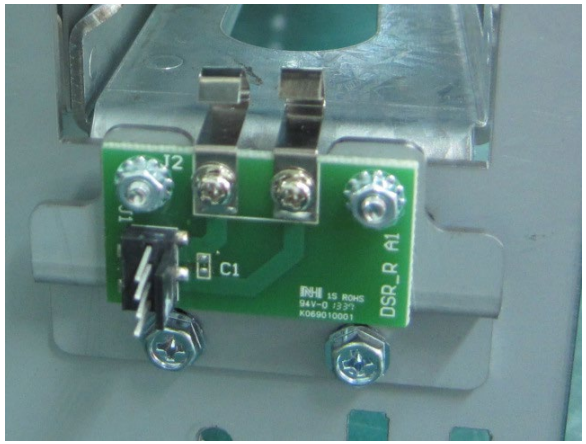

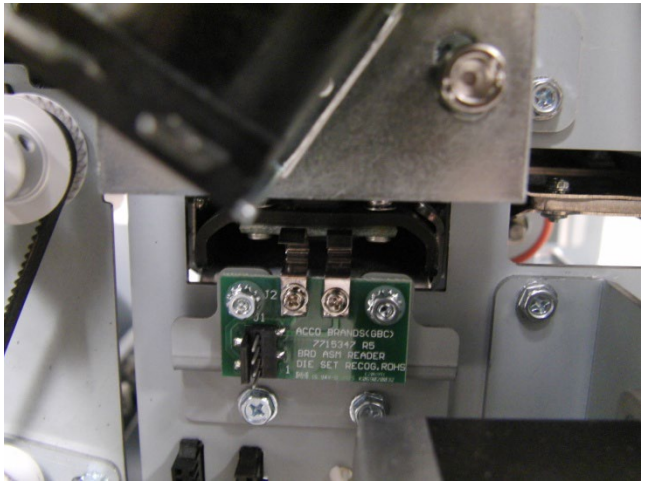

PL 4.10. Punch Module- Die Rail, Backgage, Align Sensors, Sub Assembly

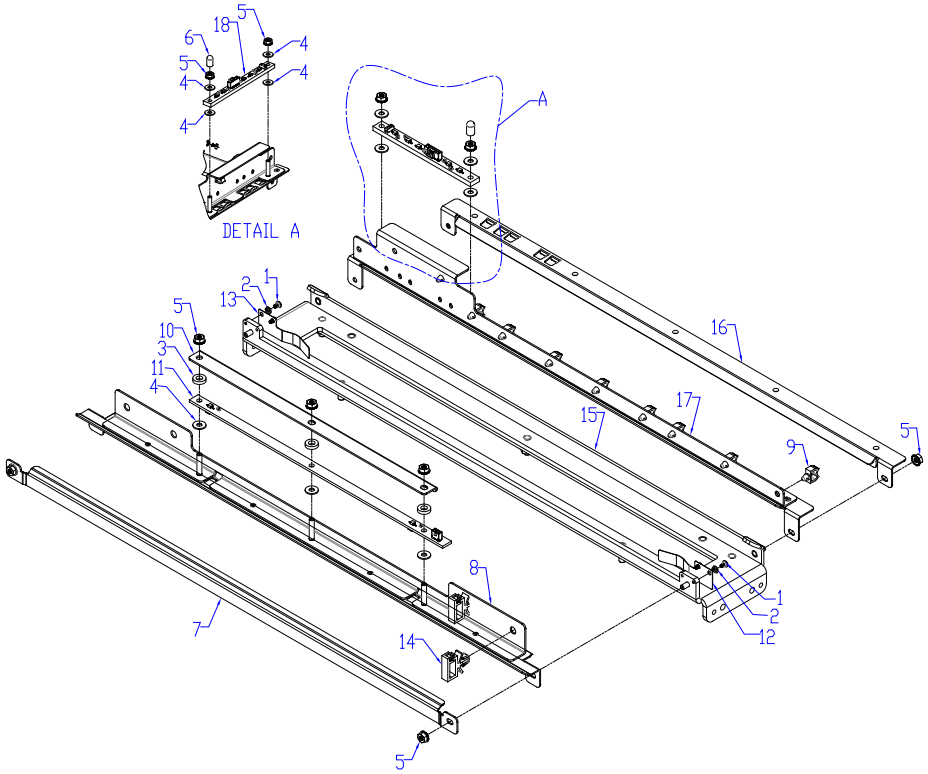

ITEM	GBC Part #		DESCRIPTION	QTY
1	1821610		SCREW, PHILLIPS, PAN HD, M2, 3MM	4
2	1821808		LOCK WASHER, SPLIT, M2	4
3	1822114		WASHER, FLAT, 4.1x8x2	3
4	1822117		WASHER, 3.2ID, 8OD, 0.75MM THK.	7
5	1824002		NUT, KEPS, M3	9
6	7708814		CAP, RUBBER, 1/8 X 1/4 X .040	1
7	7715032		BRACKET, BACKGAGE SENSOR, LOWER	1
8	7715080		BRACKET WLDMNT, BACKGAGE SENSOR	1
9	7715640		WIRE SADDLE, SHORT, ALIGN SENSOR WIRES	9
10	7715645		COVER, BACKGAGE SENSOR	1
11	7715787	S16 S17	BOARD ASSY, BACKGAGE SENSOR	1
12	7715799		SPRING, DIE RAIL, POSITION, 1	1
13	7715817		SPRING, DIE RAIL, POSITION, 2	1
14	7715986		WIRE SADDLE, SMALL, LOCKING TOP, V-0	2
15	7715988		DIE RAIL, ASSEMBLY	1
16	7715990		GUIDE, ALIGNMENT SENSOR, BOTTOM	1
17	7715787		BRACKET WLDMNT, ALIGNMENT SENSOR	1
18	Z7725728	S11 S12 S13 S14 S15	BOARD ASSY, ALIGNMENT SENSOR, SWITCHABLE	1

PL 4.11. Punch Module- AC Motor

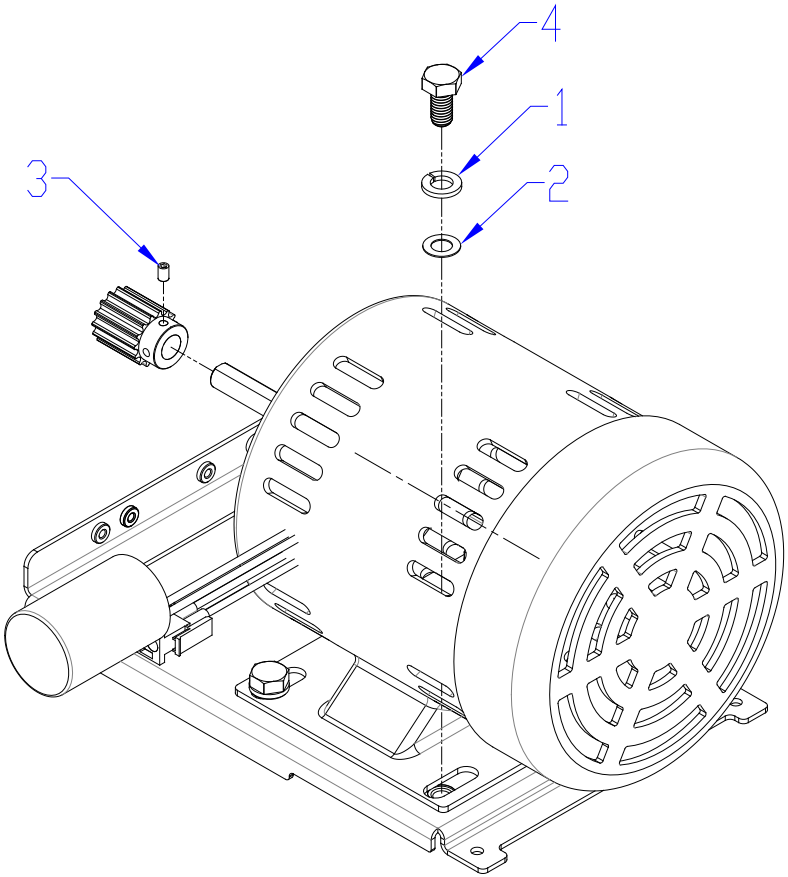

ITEM	GBC Part #		DESCRIPTION	QTY
1	1821807		WASHER, SPLIT LOCK, M8	4
2	1822113		WASHER, FLAT, 8X14X0.5	4
3	1823602		SET SCREW, NYLON PATCH, M4X6	1
4	1824703		SCREW, HEX CAP, M8, 16MM LONG	4
5	7724220	115V	MOTOR AND PULLEY, PUNCH, 115V, SERVICE	1
	7724221	230V	MOTOR AND PULLEY, PUNCH, 230V, SERVICE	1

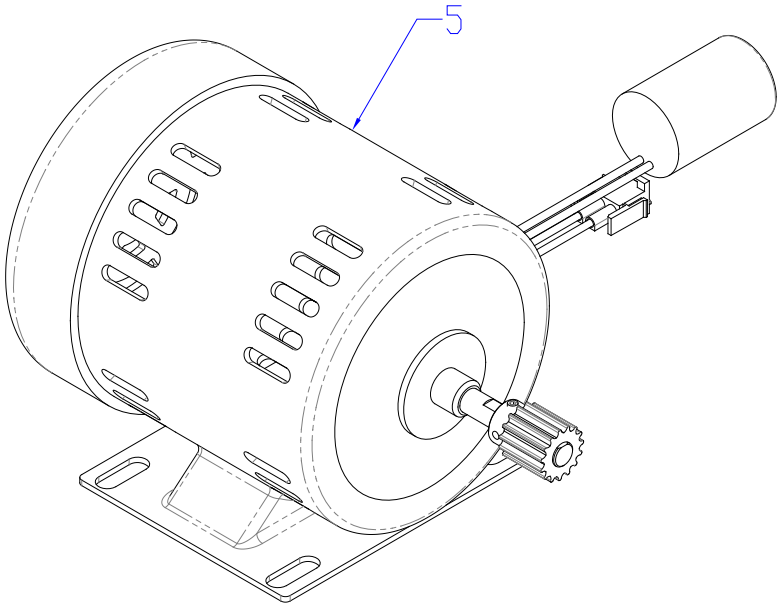

Die Sets

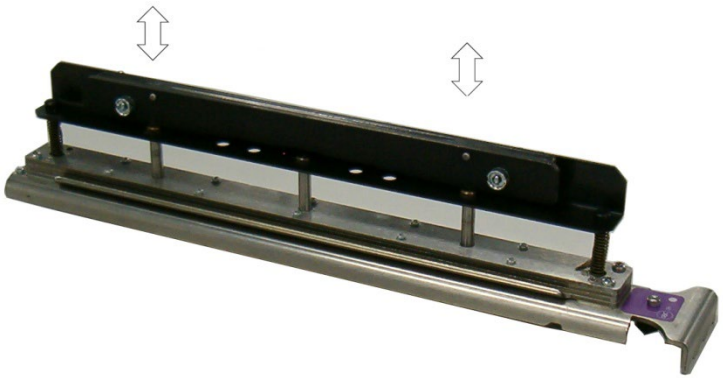

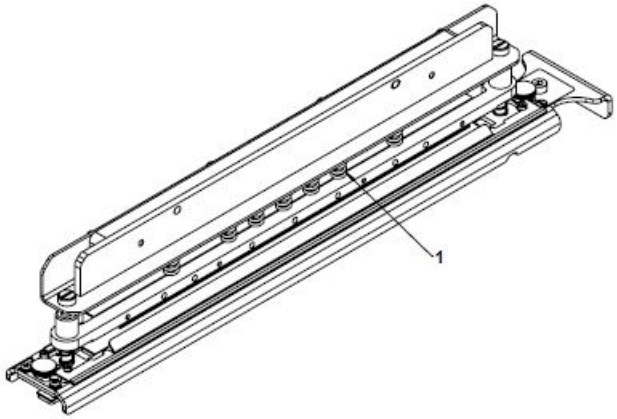

ORDER THESE DIE-SETS THROUGH KONINCA MINOLTA SUPPLIES

ITEM		DESCRIPTION
1	7723470	DIE, Coil, Rnd
2	7723471	DIE, Wire 2:1, Rnd
3	7723472	DIE, Wire 3:1, Rnd
4	7723473	DIE, 3 Hole, 8mm
5	7723474	DIE, 3/5/7 Hole, 8mm
6	7723475	DIE, 4 Hole, 8mm
7	7723476	DIE, 4 Hole, 6.5mm
8	7723477	DIE, 4 Hole Scan
9	7723478	DIE, VeloBind®, 11 Hole, Ltr
10	7723479	DIE, VeloBind®, 12 Hole, A4
11	7723480	DIE, CombBind
12	7723481	DIE, Wire 2:1, Sq
13	7723482	DIE, Wire 3:1, Sq
14	7723483	DIE, Coil, Oval
15	7723484	DIE, eWire 3:1, Rnd
16	7723485	DIE, eWire 3:1, Sq
17	7723486	DIE, Coil, Rnd, 47H HD
18	7723487	DIE, 3 Hole, 8mm, HD
19	7723488	DIE, CombBind, 21H HD

DIE-SETS REPLACEMENT PARTS

ITEM		DESCRIPTION
1	7713969	SPRING, DRIVE, CREASE/PERF
2	7724569	PERF DIE INSERT, REPLACEABLE

Electronics

PL 6.1. Electronics PCB Assembly

ITEM	GBC Part #	DESCRIPTION	QTY
1	6195001	RFI POWER FILTER	1
2	7723460	BOARD, CONTROL, MAIN	1
3	7718799	BOARD, CONTROL, COMM	1
4	7715863	FUSE,AC POWER, 250V, 5A	1

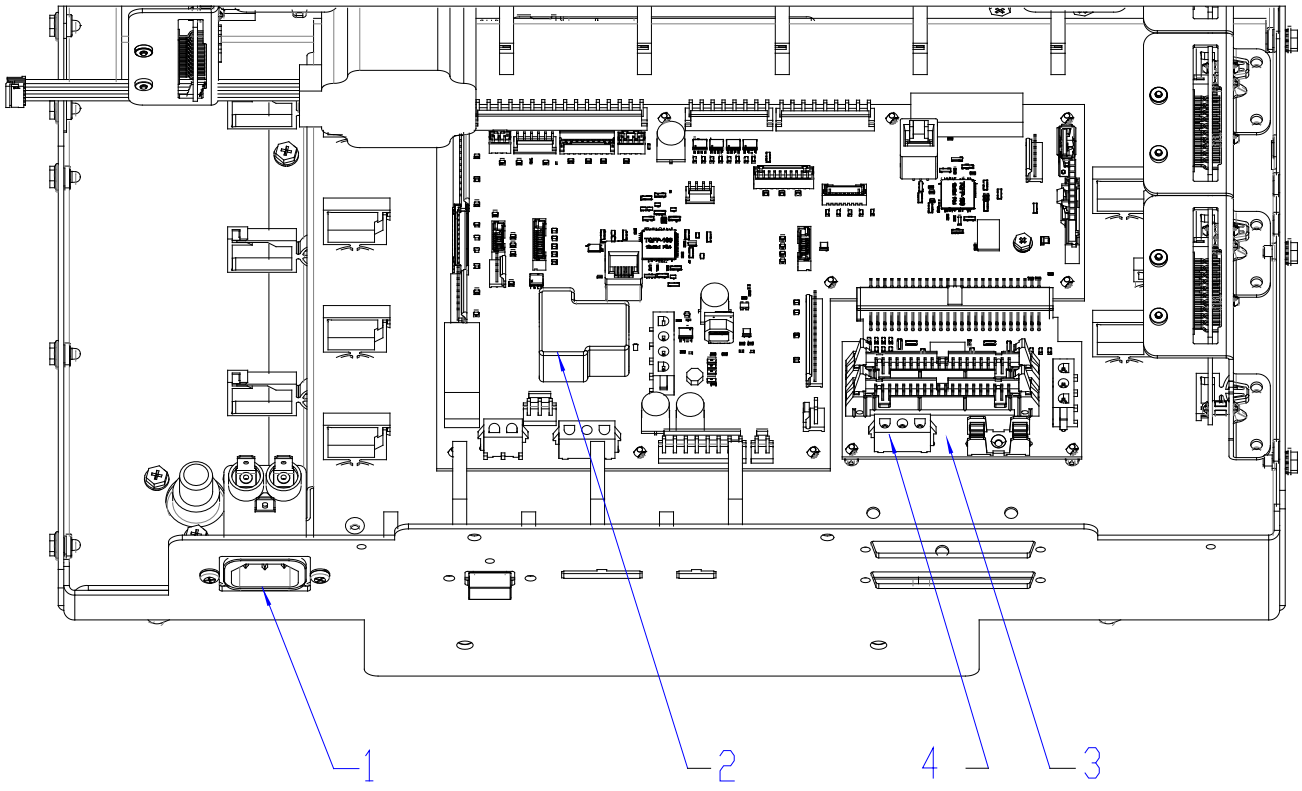

PL 6.2. Control Board Bracket Sub Assembly

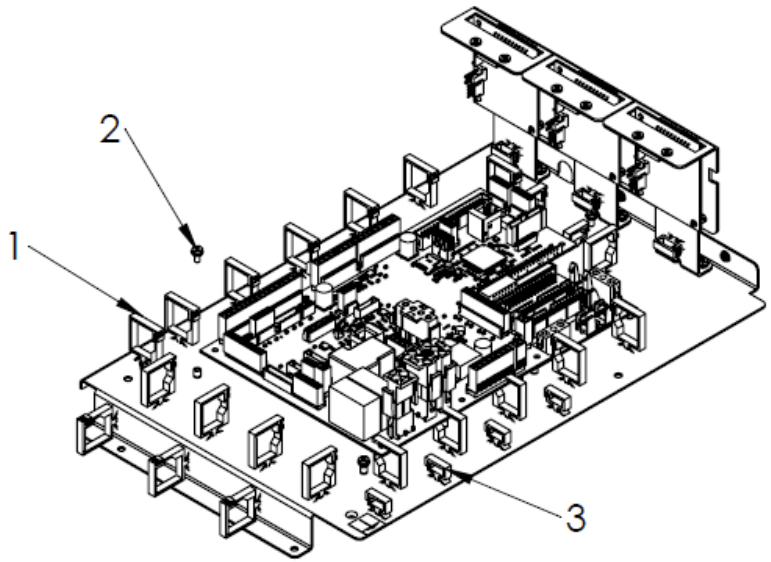

ITEM	GBC Part #	DESCRIPTION	QTY
1	7715819	WIRE SADDLE, LARGE, LOCKING TOP, V-0	19
2	1823901	SCREW, M3 X 6	11
3	7715817	WIRE SADDLE, SMALL, LOCKING TOP, V-0	4

PL 6.3. Cable Part Number Index

Refer to the Wiring drawing on the next page to locate the cables

GBC Part #	DESCRIPTION
7715451	CABLE, SENSORS S1,S25,S26
7715453	CABLE, SENSORS, ENTRY
7715455	CABLE, SENSORS, SKEW, BRD TO HDR
7715456	CABLE, SENSORS, ALIGN, BRD TO HDR
7715457	CABLE, SENSORS, BG & ALGN HM, BRD TO HDR
7715458	CABLE, SENSORS, MID BG L & XL
7715459	CABLE, SENSORS, EXIT
7715466	CABLE, SOLENOIDS, ENTRY, BRD TO HDR
7715467	CABLE, SOLENOIDS, EXIT, BRD TO HDR
7715468	CABLE, ENTRANCE & ACCEL, DRIVER
7715470	CABLE, ALIGN & STEERING, DRIVER
7715473	CABLE, EXIT, DECEL & BYPASS DRIVER
7715476	CABLE, PUNCH MOTOR
7715477	CABLE, POWER, STEPPER, DRIVERS
7715485	CABLE, CHIP TRAY
7715487	CABLE, DOOR INTERLOCK
7715490	CABLE, USB
7715492	CABLE, DC POWER
7715493	CABLE, AC TO PSU
7715494	CABLE, AC TO BOARD

7715495	CABLE, DIESET RECOGNITION
7715535	CABLE, INLET FILTER TO AC SWITCH
7715508	CABLE, SKEW, HDR TO SENSOR
7715509	CABLE, ALIGN, HDR TO SENSOR
7715510	CABLE, BG, HDR TO SENSOR
7715519	CABLE, ALIGN HOME, HDR TO SENSOR
7715520	CABLE, LEFT STEER, DRV TO HDR
7715521	CABLE, RIGHT STEER, DRV TO HDR
7715523	CABLE, LCD
7715525	CABLE, AC FILTER, GROUND
7715528	CABLE, STEERING MOTOR, MTR TO HDR, LEFT
7715529	CABLE, STEERING MOTOR, MTR TO HDR, RIGHT
7715536	CABLE, THRU BEAM, CLEAR COVER
7715537	CABLE, DEBUG TO PANEL
7715539	CABLE, GROUND, PSU TO CHASSIS
7715538	CABLE, COMM TO PANEL
7715531	CABLE, DFA, UPSTREAM, SPARTA
7718876	CABLE, PASSTHROUGH, KM SPARTA

PL 6.4. Wiring Drawing

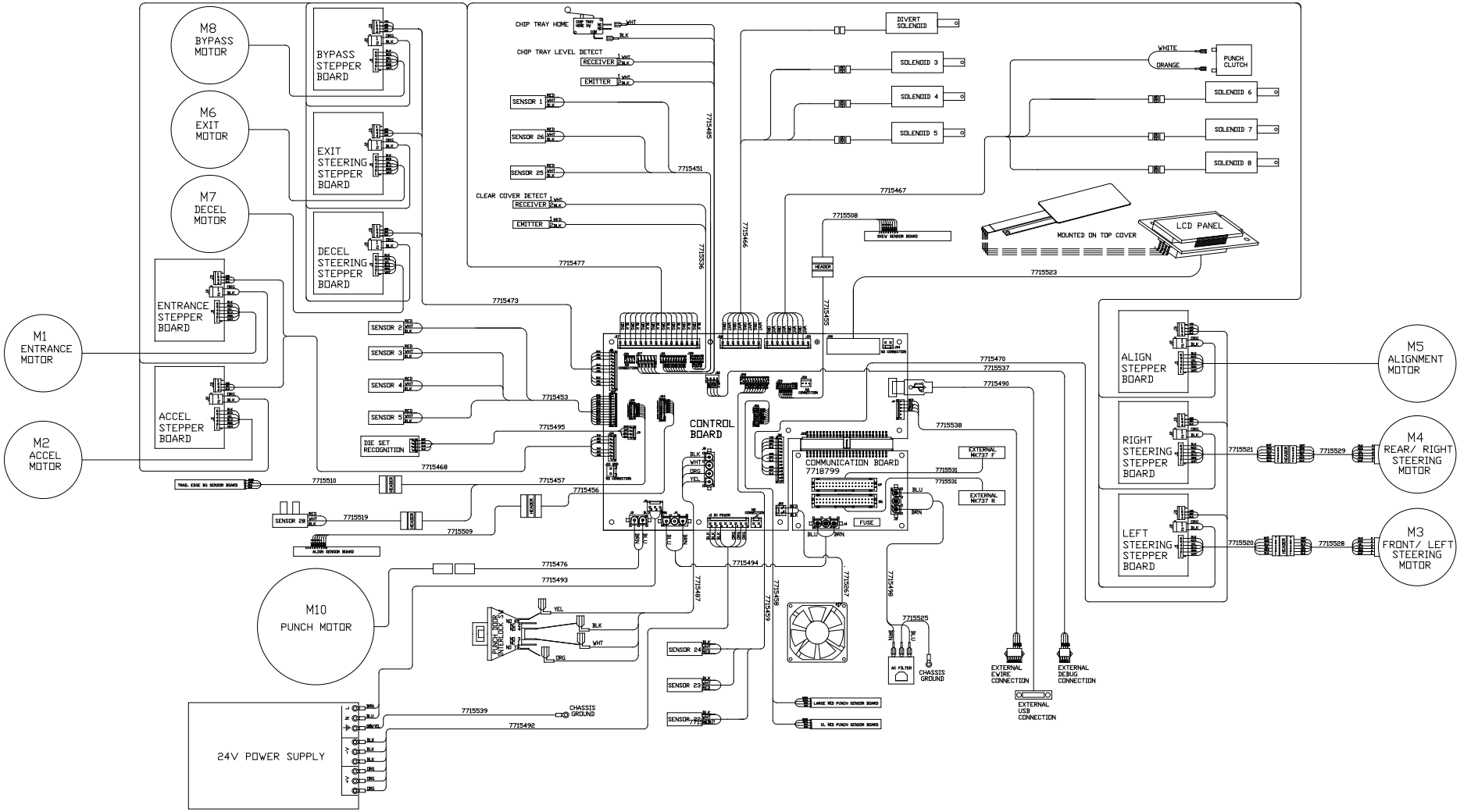

PCB'S Main Control Board and Communication Board

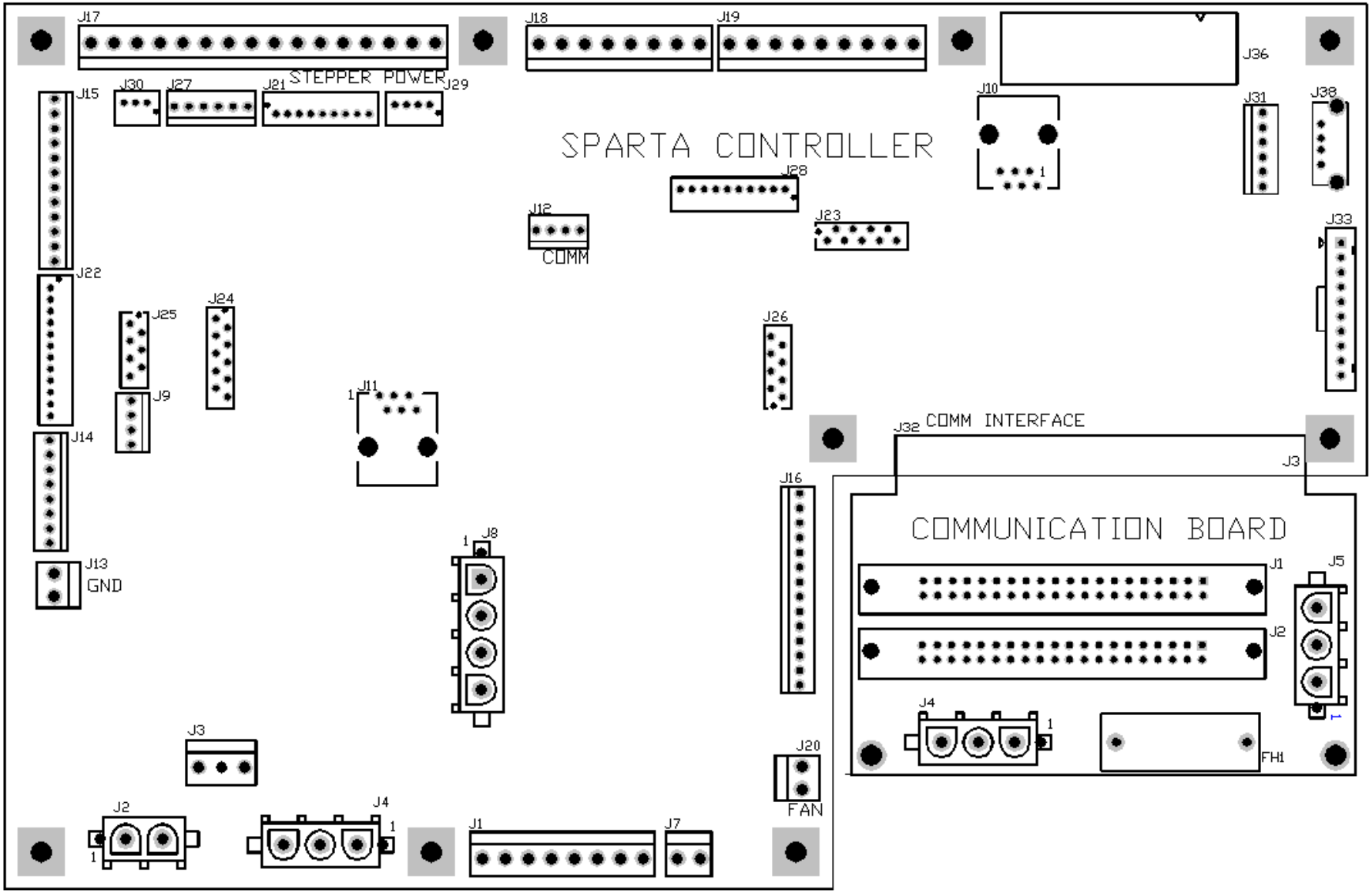

Installation Kit Parts

ITEM	GBC Part #		DESCRIPTION	QTY
1	6200001	115V	POWER CORD, US, 115V	1
2	6200002	230V	POWER CORD, EUROPE	1
3	6200014	230V	POWER CORD, UK,	1
4	6200015	230V	POWER CORD, SWISS	1
5	7715684		DRIVE, USB STICK, FLASH DRIVE	1
6	7718832		BRKT SUBASSY, DOCKING, LOWER FRNT, KM	11
7	7718834		BRKT SUBASSY, DOCKING, UPPER FRNT, KM SPARTA	12
8	7715632		SCREW, ROUND TIP, M4 X 8	12
9	7610500		CABLE ASSY, INTERFACE (37 PINS)	2
10	7723873		DOCKING BRACKET ASSY, REAR, SPARTA, KM	2
11	7718832		BRKT SUBASSY, DOCKING, LOWER FRNT, KM	1
12	7710227		BRACKET, LOCK, FRONT, LOWER	1
13	7718834		BRKT SUBASSY, DOCKING, UPPER FRNT, KM	1

Miscellaneous Parts

ITEM	GBC Part #	DESCRIPTION	QTY
1	7718648	WIPES, CLEANING, ANTI-STATIC	1

Part Number Index

Part #	DESCRIPTION	PL
1823901	SCREW, PHILLIPS, HEX HD M3X6	1.2
1823905	SCREW, PHILLIPS HX HD M4X35	1.2
1824001	NUT, KEPS M4	1.2
7610501	INTERLOCK SWITCH	1.2
7706447	MAGNET, FRONT DOOR	1.2
7706486	LATCH, PUSH TO CLOSE	1.2
7715267	FAN, EXHAUST	1.2
7723665	LCD, TOUCHSCREEN, 4.3”	1.2
7715632	SCREW, ROUND TIP, HEX HD, PHILLIPS, M4 X 8	1.2
7723646	ADAPTER PCB, LCD TOUCHSCREEN	1.2
7718836	HINGE,, UPPER SUBASSY, KM	1.2
7718838	HINGE ASSY, LOWER, KM	1.2
7718840	COVER PANEL ASSY, BACK, KM	1.2
7718847	COVER WELDMENT, R-BACK, KM	1.2
7718856	COVER, POCKET	1.2
7718859	BRACKET, EXHAUST FAN, KM	1.2
7718862	COVER, WELDMENT, SIDE, DOWNSTREAM, REAR, KM	1.2
7718867	PANEL ASSY, BACK LEFT, SPARTA, KM	1.2
7718872	SPACER, KM SPARTA, MTG INTERFACE	1.2
7718873	FOAM, KM SPARTA	1.2
7724412	TOP COVER WELDMENT	1.2
7724422	RIBBON CABLE, LCD	1.2
PL 5.5	UPPER BYPASS PANEL	2.1
PL 5.2	ENTRANCE IDLER PANEL	2.1
PL 5.1	ENTRANCE DRIVE PANEL	2.1
PL 5.3	ACCELERATION IDLER PANEL	2.1
PL 5.4	EXIT IDLER PANEL	2.1
7715101	PANEL, ENTRANCE, LOWER	2.1
7715102	PANEL, ENTRANCE, INNER	2.1
7715146	PANEL, EXIT, LOWER	2.1
7715153	PANEL, EXIT, INNER	2.1
7724137	PANEL ASSEMBLY, LOWER, EXIT	2.1

Part #	DESCRIPTION	PL
7715209	SHAFT, IDLER PANEL HINGE	2.1
7715210	SHAFT, IDLER PANEL HINGE, LONG	2.1
7715251	BRACKET, IDLER PANEL MOUNT	2.1
7715150	PANEL WELDMENT, DRIVE, EXIT	2.1
7715128	PANEL WELDMENT, BYPASS, LOWER	2.1
1821209	SNAP-IN BEARING, 6MM ID [Qty. (2) used on all Idler panels- #A, #B, #D, #E and #5	2.1
7718619	SHAFT, IDLER PANEL HINGE, OFFSET GROOVE, LONG	2.1
1821209	Snap-in Bearing, 6mm ID for 1.45-2.34 mm Thk Mtrl	2.2
1822202	E-RING, JE-5	2.2
1823711	JAM NUT, M16X2.0	2.2
1823901	SCREW, PHILLIPS HX HD W/SEMS, M3 X 6	2.2
1823909	SCREW, PHILLIPS HX HD W/SEMS M4 X 6	2.2
1824001	NUT, KEPS M4	2.2
1821606	SCREW, PHILLIPS PAN HD W/SEMS M3 X 10	2.2
7715195	MAGNET, PANEL, OPEN, STRONG	2.2
7715215	HANDLE, ACCEL IDLER LATCH	2.2
7715385	MAGNET, BRACKET, ASSY	2.2
7715427	CHIP TRAY, ASSEMBLY	2.2
7715650	LATCH, BYPASS	2.2
7715637	POWER SUPPLY, 24V, MW SP 480,	2.2
7715789	MAGNET, PANEL, OPEN, WEAK	2.2
7708163	CAP, RUBBER, RAIN BLUE	2.2
7715630	CASTER, ADJUSTABLE	2.2
1823913	SCREW, PHILLIPS HX HD W/SEMS M3 X 8	2.2
1821209	Snap-in Bearing, 6mm ID	2.3
1821611	SCREW, PHILLIPS HD W/SEMS, M3X10	2.3
1822005	WASHER, FLAT, 6.025 X 8 X 0.75	2.3
1822202	E-RING, JE-5	2.3
1823910	SCREW, PHILLIPS HX HD W/SEMS M4 X 14	2.3
1824001	NUT, KEPS M4	2.3
1825501	RETAINING RING, 6MM SHAFT	2.3
1902863	SCREW,MACHINE PAN #4-40 X 15/32 PHILLIPS	2.3
1925044	WSHR, .192 ID X .625 OD X .060 T	2.3
1952208	SPACER, TIMING BELT IDLERS, BRONZE	2.3

Part #	DESCRIPTION	PL
1954011	GROMMET, 3/8 I.D X 1/2 O.D	2.3
1954032	GROMMET, 1 1/4 I.D. X 1 1/2 O.D.	2.3
7712703	WIRE HEADER CONNECTOR, 2 POS	2.3
7714679	GROUND STRAP, M4	2.3
7715185	BRACKET, PUNCH MODULE MOUNT	2.3
7715383	ROLLER, IDLER, DRIVE ASSY,	2.3
7715390	WIRE CLAMP, EDGE	2.3
7715445	WIRE CLAMP, EDGE, SMALL	2.3
7715813	SOLENOID, BRACKET, DIVERTER, SUB ASSEMBLY	2.3
7715818	WIRE SADDLE, MEDIUM, LOCKING TOP, V-0	2.3
7715819	WIRE SADDLE, LARGE, LOCKING TOP, V-0	2.3
7715817	WIRE SADDLE, SMALL, LOCKING TOP, V-0	2.3
7715093	ROLLER ASSY, DRIVE	2.4
7715097	ROLLER ASSY, ONE WAY CLUTCH DRIVE	2.4
1821116	BEARING, BALL, FLANGE 6X13X5, SUJ2	2.4
1822005	WASHER, FLAT, 6.025 X 8 X 0.75	2.4
1822202	E-RING, JE-5	2.4
7706532	BEARING BALL FLANGE	2.4
1925222	WASHER FLAT, NON-METALLIC 1/4X3/8X/1/32	2.4
7715862	ONE WAY CLUTCH SUB ASSEMBLY, SERVICE	2.4
1822108	WASHER, FLAT, 4.1X8X1.5	2.5
1823911	SCREW, PHILLIPS HX HD W/SEMS M4 X 10	2.5
7711970	EMITTER	2.5
7711973	RECEIVER	2.5
7715131	BYPASS DIVERTER	2.5
7715186	CHIP TRAY SENSOR MOUNT ASSY	2.5
7715213	SHAFT, ACCEL IDLER LATCH	2.5
7724141	LATCH, ASSY, REAR, ACCEL IDLER PANEL	2.5
7724140	LATCH, ASSY, FRONT, ACCEL IDLER PANEL	2.5
7715637	POWER SUPPLY, 24V, MW SP 480,	2.5
7715159	STEPPER AND MOUNT ASSEMBLY	2.6
7715275	DRIVER AND BRACKET ASSY, TWO PHASE	2.6
7715627	Entrance Sensor, S1	2.7
7715291	Entrance Sensor, Top	2.7
7715291	Entrance Sensor, Middle	2.7
7715291	Entrance Sensor, Bottom	2.7
7715291	Accel Sensor	2.7
7715692	Skew Sensor Board	2.7
Z7725728	Alignment Sensor Board	2.7

Part #	DESCRIPTION	PL
7715696	Backage Sensor Board Assy	2.7
7715696	Mid Punch Large, Sensor Board Backage Sensor Board Assy	2.7
7715696	Mid Punch X- Large, Sensor Board Backage Sensor Board Assy	2.7
7715291	Exit Sensor, Bottom	2.7
7715291	Exit Sensor, Middle	2.7
7715291	Exit Sensor, Top	2.7
7715291	Exit Sensor	2.7
7715291	Bypass Sensor, Middle	2.7
7715597	Align Home Sensor	2.7
7711970	Chip Level Sensor - Emitter	2.7
7711973	Chip Level Sensor - Receiver	2.7
7715774	Clear Cover Sensor - Emitter	2.7
7711973	Clear Cover Sensor - Receiver	2.7
7715813	Diverter Subassembly	2.8
7715020	Punch Clutch	2.8
7724133	Entrance Idler Solenoid, Middle	2.8
7724133	Entrance Idler Solenoid, Bottom	2.8
7724133	Acceleration Roller Solenoid	2.8
7724133	Exit Idler Solenoid, Bottom	2.8
7724133	Exit Idler Solenoid, Middle	2.8
7724133	Exit Idler Solenoid, Top	2.8
7610501	Front door Interlock Switch	2.8
7715186	Chip Tray Home Switch Assembly	2.8
7715202	BELT, 534T, 2MM 2GT	2.9
7715204	PULLEY, TIMING, 2MM 2GT, 30 GROOVES	2.9
7715206	BELT, 179T, 2MM 2GT	2.9
7715243	BELT, 150 T, 2MM 2GT	2.9
7715245	TENSIONER ASSEMBLY	2.9
7715246	BELT, 134T, 2MM 2GT	2.9
1824002	NUT, KEPS, M3	3.1
7711973	RECEIVER	3.1
7715696	MID PUNCH, LARGE, SENSOR BOARD BOARD ASSY, BACKGAGE SENSOR	3.1
7715696	MID PUNCH, X LARGE, SENSOR BOARD BOARD ASSY, BACKGAGE SENSOR	3.1
7715871	PANEL WELDMENT, DRIVE, ENTRANCE, SERVICE	3.1
1822108	WASHER, FLAT, 4.1X 8X1.5	3.1

Part #	DESCRIPTION	PL
1822117	WASHER, 3.2ID, 8OD, 0.75MM THICK	3.1
1823903	SCREW, PHILLIPS, HX HD M4X8	3.1
7711970	EMITTER	3.2
7715103	ROLLER ASSY, IDLER	3.2
7724133	MODULE, SOLENOID, DISENGAGING ROLLER	3.2
7715291	SENSOR AND BRACKET ASSEMBLY	3.2
7717410	SPRING, TRANSPORT IDLER ROLLERS	3.2
7715382	BEARING HOUSING	3.2
7715384	HANDLE ASSY, IDLER PANELS	3.2
7715625	WIRE SADDLE, SHORT	3.2
7715629	SCREW, BARREL, M4, 7MM THREAD DEPTH	3.2
7715639	WIRE SADDLE, SMALL, SIDE OPENING	3.2
7715873	PANEL WELDMENT, IDLER, ENTRANCE, SERVICE	3.2
7714679	GROUND STRAP, M4	3.2
7715774	EMITTER ASSY, CLEAR COVER SENSOR	3.2
7708163	CAP, RUBBER	3.2
7708163	CAP, RUBBER	3.3
7715103	ROLLER ASSY, IDLER	3.3
7724133	MODULE, SOLENOID, DISENGAGING ROLLER	3.3
7715291	SENSOR AND BRACKET ASSEMBLY	3.3
7718594	BRUSH, ANTI STATIC	3.3
7717410	SPRING, TRANSPORT IDLER ROLLERS	3.3
7715382	BEARING HOUSING ASSY	3.3
7715817	WIRE SADDLE, SMALL, LOCKING TOP	3.3
7715629	SCREW, BARREL, M4, 7MM THREAD DEPTH	3.3
7715875	PANEL WELDMENT, IDLER, ACCEL, -SERVICE	3.3
7714679	GROUND STRAP, M4	3.3
7715103	ROLLER ASSY, IDLER	3.4
7724133	MODULE, SOLENOID, DISENGAGING ROLLER	3.4
7715291	SENSOR AND BRACKET ASSEMBLY	3.4
7717410	SPRING, TRANSPORT IDLER ROLLERS	3.4
7715384	HANDLE ASSY, IDLER PANELS	3.4
7715382	BEARING HOUSING ASSY	3.4
7715625	WIRE SADDLE, SHORT	3.4
7715629	SCREW, BARREL, M4, 7MM THREAD DEPTH	3.4
7715639	WIRE SADDLE, SMALL, SIDE OPENING	3.4
7715874	PANEL WELDMENT, IDLER, EXIT,-SERVICE	3.4
7714679	GROUND STRAP, M4	3.4
7708163	CAP, RUBBER	3.4
1824002	NUT, KEPS, M3	3.5
7715103	ROLLER ASSY, IDLER	3.5

Part #	DESCRIPTION	PL
7715291	SENSOR AND BRACKET ASSEMBLY	3.5
7718593	BRUSH, ANTI-STATIC	3.5
7717410	SPRING, TRANSPORT IDLER ROLLERS	3.5
7715382	BEARING HOUSING ASSY	3.5
7715384	HANDLE ASSY, IDLER PANELS	3.5
7715627	SENSOR AND BRACKET ASSEMBLY, S1	3.5
7715629	SCREW, BARREL, M4, 7MM THREAD DEPTH	3.5
7715872	PANEL WELDMENT, BYPASS, UPPER, SERVICE	3.5
7714679	GROUND STRAP, M4	3.5
7708163	CAP, RUBBER	3.5
1822117	WASHER, 3.2ID, 8OD, 0.75MM THICK	3.5
7724133	Module, Solenoid, Disengaging Roller	3.6
7723650	PUNCH MODULE, ASSY, 115V	4.1
7723651	PUNCH MODULE, ASSY, 230V	4.1
1821118	BEARING, BALL, FLANGE, 12X24X6, SUJ2	4.1
1821215	BEARING, CLIP, 12MM	4.1
1821802	Spring washer M4	4.1
1821532	SCREW, SHCS, M4 X 12	4.1
1822016	WASHER, NYLON,ID 12.7, OD 19, 1.5MM THK	4.1
1822205	E-RING, JE-10	4.1
1823203	SCREW, SHOULDER, SOCKET HD, M5, 6MM SHOULDER	4.1
1823911	SCREW, PHILLIPS HX HD W/SEMS M4 X 10	4.1
1824003	NUT, KEPS, M6	4.1
7715033	STEERING MODULE SUB ASSY	4.1
7715237	SHAFT, DIE LOCK	4.1
7715368	HANDLE, DIE LOCK	4.1
7715818	WIRE SADDLE, MEDIUM, LOCKING TOP, V-0	4.1
7715886	PUNCH MODULE SHELL, SERVICE	4.1
1821514	SHCS, M3X12	4.1
1821541	SCREW, SOCKET HD, M6, 35MM LONG	4.1
1821655	SCREW, PHILLIPS, PAN HD, M4X25	4.1
1823903	SCREW, PHILLIPS, HX HD M4X8	4.1
1825203	WIRE SADDLE, SNAP TYPE, SMALL, 3mm	4.1
1823701	NUT, HEX, M3	4.1
7715030	BRACKET, CLUTCH STUD	4.1
7715079	MOUNT PIN, PUNCH MODULE	4.1
7715232	BELT, TIMING, 82 GROOVE, 5MM HTD	4.1
7715372	BELT, TIMING, 80 GROOVE, 5MM HTD, 15MM WIDE	4.1
7715238	BRACKET AND BEARING ASSY, DIE LOCK	4.1
7715239	PLUNGER AND STRIPPER ASSY, DIE LOCK	4.1

Part #	DESCRIPTION	PL
7715320	MAGNET, DIE STOP	4.1
7715374	SPRING, DIE LOCK RETURN	4.1
1824001	NUT, KEPS M4	4.1
7715857	Left / Front Steering Motor and Pulley.	4.2
7715857	Right / Rear Steering Motor and Pulley.	4.2
7715859	Alignment Stepper Motor and Pulley.	4.2
7715692	Skew Sensor Board	4.2
7718567	Alignment Sensor Board	4.2
7715696	Backage Sensor Board	4.2
1823901	SCREW, PHILLIPS HX HD W/SEMS, M3 X 6	4.3
1823913	SCREW, PHILIPS-HEX HD W/EXT STAR WASHER, M3 X 8	4.3
1824002	NUT, KEPS, M3	4.3
7715445	WIRE CLAMP, EDGE, SMALL	4.3
7715597	SENSOR, VEIN, BRACKET, SUB ASSEMBLY	4.3
7715779	GROUND STRAP, STEERING CARRIAGE	4.3
7715877	ALIGNMENT CARRIAGE, SUB ASSEMBLY, RICOH, SERVICE	4.3
1822117	WASHER, 3.2ID, 8OD, 0.75MM THK.	4.4
1824002	NUT, KEPS, M3	4.4
7706488	BEARING, DOUBLE "D" FLANGE	4.4
7715062	PANEL WELDMENT, IDLER, STEERING	4.4
7717410	SPRING, STEERING IDLER ROLLERS	4.4
7715648	WIRE CLAMP, LOCKING	4.4
7715692	BOARD ASSY, SKEW SENSOR	4.4
7715816	ROLLER ASSY, IDLER, STEERING	4.4
1822008	WASHER, FLAT, 6.4X12X1.5	4.5
1822202	E-RING, JE-5	4.5
1823901	SCREW, PHILLIPS HX HD W/SEMS, M3 X 6	4.5
1824002	NUT, KEPS, M3	4.5
7715039	ROLLER ASSEMBLY, DRIVE, STEERING	4.5
7715044	SHAFT, STEERING DRIVE	4.5
7715047	BELT, STEERING, 65 GROOVES, 2MM 2GT	4.5
7715053	PANEL WELDMENT, DRIVE, STEERING	4.5
7717410	SPRING, STEERING DRIVE ROLLER	4.5
7715648	WIRE CLAMP, LOCKING	4.5
7715777	SLEEVE, SPIRAL, STEERING MOTOR WIRES	4.5
7715857	STEPPER MOTOR AND PULLEY, STEERING, SERVICE	4.5
7715857	STEPPER MOTOR AND PULLEY, STEERING, SERVICE	4.5

Part #	DESCRIPTION	PL
1823906	SCREW, PHILLIPS HX HD W/SEMS M5 X 10	4.6
7715078	BRACKET, ALIGNMENT STEPPER MOUNT	4.6
7715859	STEPPER MOTOR AND PULLEY, ALIGNMENT, SERVICE	4.6
1821531	SCREW, SHCS, M5X18	4.7
1821801	WASHER, SPLIT LOCK, M5	4.7
7715020	CLUTCH, WRAP SPRING	4.7
7715231	PULLEY AND FLANGE, 5MM HTD, 38T, ASSY	4.7
7715371	PULLEY AND FLANGE, 5MM HTD, 34T, ASSY	4.7
7715347	Board, ASM, Reader, Die Set Recognition	4.8
1824002	NUT, KEPS, M3	4.8
1821808	LOCK WASHER, SPLIT, M2	4.9
1822117	WASHER, 3.2ID, 8OD, 0.75MM THK.	4.9
1824002	NUT, KEPS, M3	4.9
7715986	DIE RAIL, ASSEMBLY	4.9
7715032	BRACKET, BACKGAGE SENSOR, LOWER	4.9
7715080	BRACKET WELDMENT, BACKGAGE SENSOR	4.9
7715990	BRACKET WELDMENT, ALIGNMENT SENSOR,	4.9
7715988	GUIDE, ALIGNMENT SENSOR, BOTTOM	4.9
7715640	WIRE SADDLE, SHORT, ALIGN SENSOR WIRES	4.9
Z7725728	BOARD ASSY, ALIGNMENT SENSOR	4.9
7715696	BOARD ASSY, BACKGAGE SENSOR	4.9
7715787	SPRING, DIE RAIL, POSITION, 1	4.9
7715799	SPRING, DIE RAIL, POSITION, 2	4.9
1821807	WASHER, SPLIT LOCK, M8	4.10
1822113	WASHER, FLAT, 8X14X0.5	4.10
1823602	SET SCREW, NYLON PATCH, M4X6	4.10
1824703	SCREW, HEX CAP, M8, 16MM LONG	4.10
7724220	MOTOR AND PULLEY, PUNCH, 115V, SERVICE	4.10
7724221	MOTOR AND PULLEY, PUNCH, 230V, SERVICE	4.10
7723470	DIE, Coil, Rnd	5.1
7723471	DIE, Wire 2:1, Rnd	5.1
7723472	DIE, Wire 3:1, Rnd	5.1
7723473	DIE, 3 Hole, 8mm	5.1
7723474	DIE, 3/5/7 Hole, 8mm	5.1
7723475	DIE, 4 Hole, 8mm	5.1
7723476	DIE, 4 Hole, 6.5mm	5.1
7723477	DIE, 4 Hole Scan	5.1
7723478	DIE, Ricoh, Velobind®, 11 Holes, Ltr.	5.1

Part #	DESCRIPTION	PL
7723479	DIE, Ricoh, Velobind®, 12 Holes, A4	5.1
7723480	DIE, CombBind	5.1
7723481	DIE, Wire 2:1, Sq	5.1
7723482	DIE, Wire 3:1, Sq	5.1
7723483	DIE, Coil, Oval	5.1
7723484	DIE, Coil, Rnd, 47H HD	5.1
7723485	DIE, 3 Hole, 8mm, HD	5.1
7723486	DIE, CombBind, 21H HD	5.1
6195001	RFI POWER FILTER	6.1
7723460	BOARD, CONTROL, MAIN	6.1
7718799	BOARD, COMMUNICATION, KM	6.1
7715863	Fuse, AC Power, 250V, 5A	6.1
1823901	SCREW, PHILLIPS HX HD W/SEMS, M3 X 6	6.2
7715183	WIRE SADDLE, LARGE, LOCKING TOP, V-0	6.2
7715819	STANDOFF, PLASTIC, 2 PHASE DRIVER	6.2
6200001	POWER CORD, US, 115V	7.1
6200002	POWER CORD, EUROPE	7.1
6200014	POWER CORD, UK,	7.1
6200015	POWER CORD, SWISS	7.1
7715684	DRIVE, USB STICK, FLASH DRIVE	7.1
7718832	BRKT SUBASSY, DOCKING, LOWER FRNT, KM	7.1
7718834	BRKT SUBASSY, DOCKING, UPPER FRNT, KM SPARTA	7.1
7715632	SCREW, ROUND TIP, M4 X 8	7.1
7610500	CABLE ASSY, INTERFACE (37 PINS)	7.1
7723873	DOCKING BRACKET ASSY, REAR, SPARTA, KM	7.1
7718832	BRKT SUBASSY, DOCKING, LOWER FRNT, KM	7.1
7710227	BRACKET, LOCK, FRONT, LOWER	7.1
7718834	BRKT SUBASSY, DOCKING, UPPER FRNT, KM	7.1
7718648	WIPES, CLEANING, ANTI-STATIC	7.1